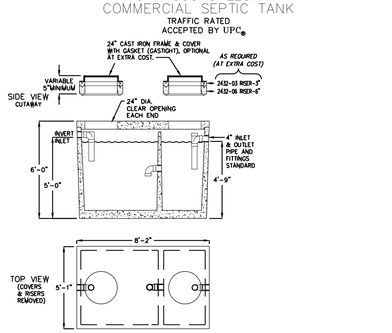

LIQUID CAPACITY: 1,000 GALLONS.

BOX DESIGN LOAD: H=20 TRAFFIC FROM 1' TO 6' OF SOIL COVER.

NOTE: SEPTIC SYSTEM TO BE DESIGNED BY BRADY FRICK. THIS DRAWING REPRESENTS A SAMPLE OF TRAFFIC-RATED SEPTIC SYSTEM PROPOSED FOR THE PROJECT.

7 SEPTIC SYSTEM DETAIL
C100 SCALE: N.T.S.

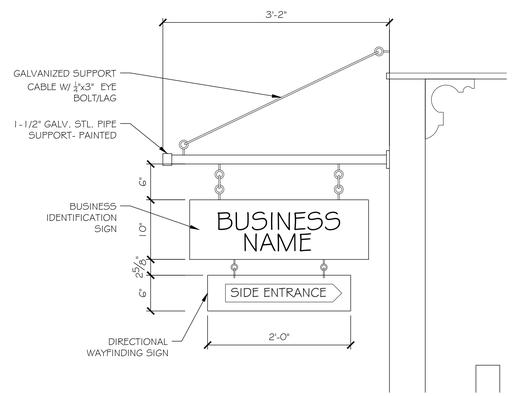

6 EXTERIOR SIGN DETAIL
C100 SCALE: 1" = 1'-0"

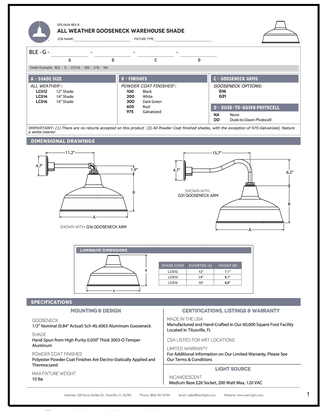

LIGHTING SPECIFICATION
LED FULL-CUTOFF GOOSENECK

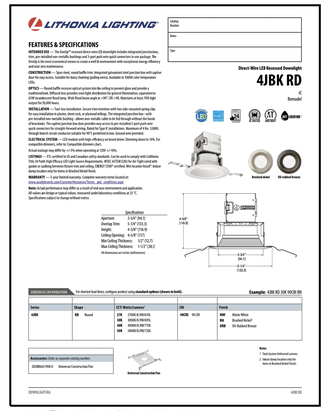

LIGHTING SPECIFICATION
LED DOWNLIGHT

SITE PLAN NOTES:

1. THE AFFECTED PARCEL IS 17 SCHOOL STREET (BOWDOINHAM TAX MAP LOT 17)
2. DEED REFERENCES ARE MADE TO THE SAGADAHOC COUNTY REGISTRY OF DEEDS (SCRD)- BATH, ME.
3. FLOOD ZONE CLASSIFICATION: PROPERTY DOES NOT LAY WITHIN A DESIGNATED FLOOD HAZARD ZONE (ZONE X).
4. ALL UNDERGROUND UTILITIES ARE TO BE FIELD VERIFIED AND MARKED BY DIG SAFE AND/OR THE RESPECTIVE UTILITY COMPANY PRIOR TO EXCAVATION ACTIVITIES.
5. PROPERTY LOT LINE DESCRIPTIONS ARE DERIVED FROM TOWN OF BOWDOINHAM TAX MAP INFORMATION AVAILABLE AT THE TOWN OF BOWDOINHAM WEBSITE.
6. ALL AREAS OF LANDSCAPE BUFFER (GRASS & FENCING) TO BE RETAINED AND MAINTAINED FREE OF PARKING AND STORAGE USES.

ZONING SUMMARY:

1. Property is located in the VILLAGE I DISTRICT (V1D)
2. Parcel Area: 0.21 acres / 9,147 square feet (sf)
3. Zoning Reqs:

	Required or Allowed	/ Provided
Min Lot Area	20,000 sf	/ 9,147 sf (existing)
Min Frontage	75 feet	/ 80'-0" (existing)
Min Front Setback	20 feet	/ 6'-5" (existing)
Min Side/Rear Setback	10 feet	/ 7'-6" (existing)
Max. Bldg Height	40 ft (permit for 39.5')	/ 45'-3" (proposed)
Max. Lot Coverage	30% (50% non-conf)	/ 31.3% (existing)
Use Designation	Marijuana Production & Recreational Use, Residential	
Parking Req.	7 spaces req.	/ 7 spaces provided

Overlay zoning distncts (if any): N/A

PLATZ ASSOCIATES
Architects - Engineers
Construction Managers
Tel 207-784-2941
Fax 207-784-3856
Two Great Falls Plaza, Auburn, Maine 04210

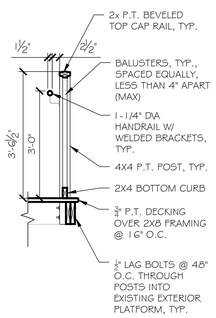

5 RAILING DETAIL
C100 SCALE: 1/2" = 1'-0"

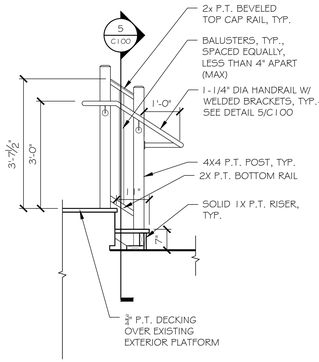

4 EXTERIOR STAIR DETAIL
C100 SCALE: 1/2" = 1'-0"

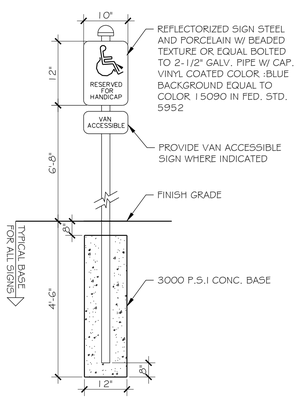

3 ADA PARKING SIGN DETAIL
C100 SCALE: 1/2" = 1'-0"

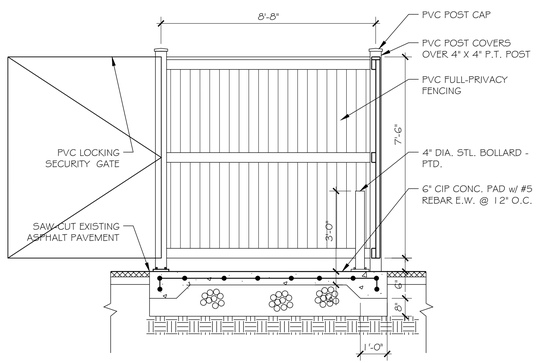

NOTE: PROVIDE A PVC GATE ON DUMPSTER ENCLOSURE. GATES TO BE INSTALLED WITH GALV. HINGES & LOCKING HARDWARE. GATE TO BE 8'-0" HIGH x 10'-6" WIDE. PROVIDE PVC GATES TO MATCH FENCE STYLE. FENCE SUPPLIER TO SUBMIT SHOP DRAWINGS REVIEW AND APPROVAL. INCLUDE DESIGN DETAILS AND DRAWINGS SHOWING ALL HARDWARE, FASTENERS AND INSTALLATION REQUIREMENTS.

2 DUMPSTER ENCLOSURE DETAIL
C100 SCALE: 3/8" = 1'-0"

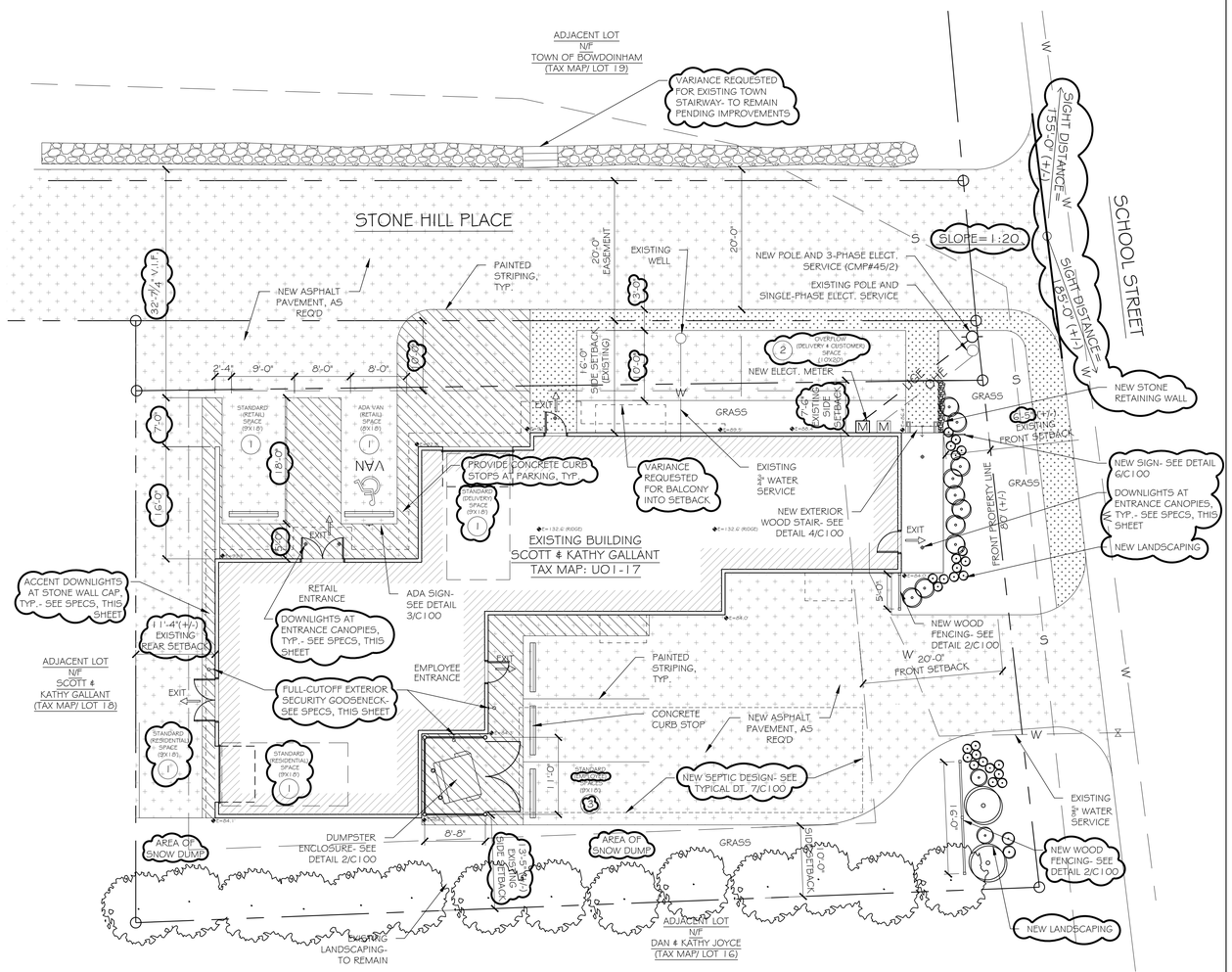

NOTE: ALL GRADE AND RIDGE ELEVATIONS PROVIDED BY SURVEYWORKS OF AUBURN, ME.

1 SITE PLAN
~ SCALE: 1" = 10'-0"

Proposed Renovation of:

STONE HILL GENERAL
MIXED-USE MARIJUANA PRODUCTION & RETAIL STORE
17 SCHOOL STREET
Bowdoinham, Maine 04008

SEAL
LICENSED ARCHITECT
TRAVIS R. NADEAU
4038
STATE OF MAINE

ORIGINAL DATE: 05/14/2021		
DRAWING ISSUE		
No.	DESCRIPTION	DATE
1	FMO PERMIT	06/07/21
2	PLAN BRD	02/10/22
3	PLAN ADJ	03/14/22

JOB NO. 202123

DRAWN BY ZML | CHECKED BY TRN

SHEET TITLE: SITE PLAN & DETAILS

SHEET: C100

I:\202123- 17 SCHOOL STREET\CONDOCS