FujiClean USA™

Toward Clean Water...

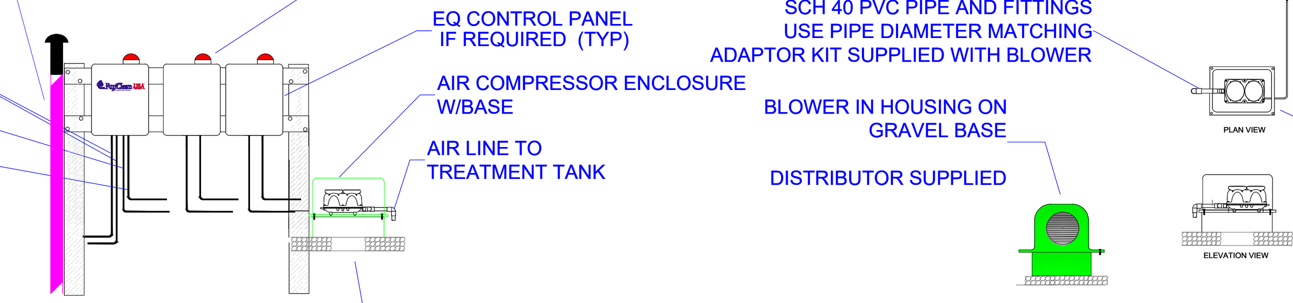

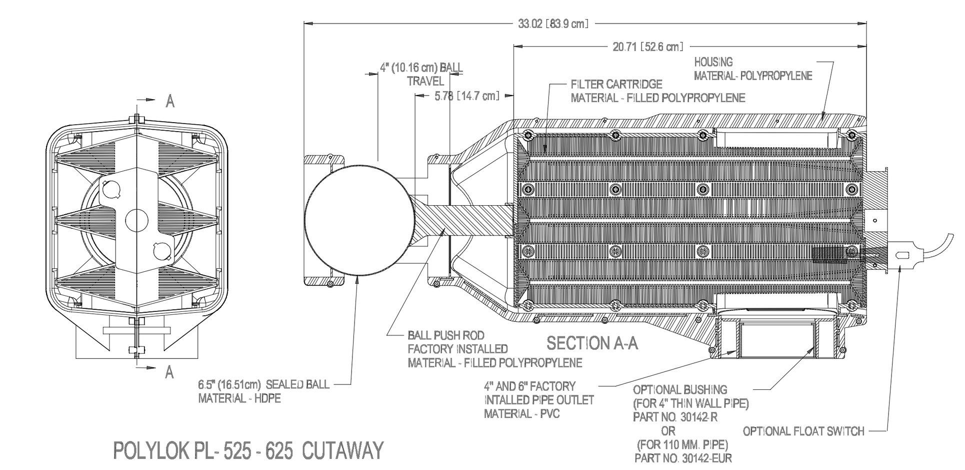

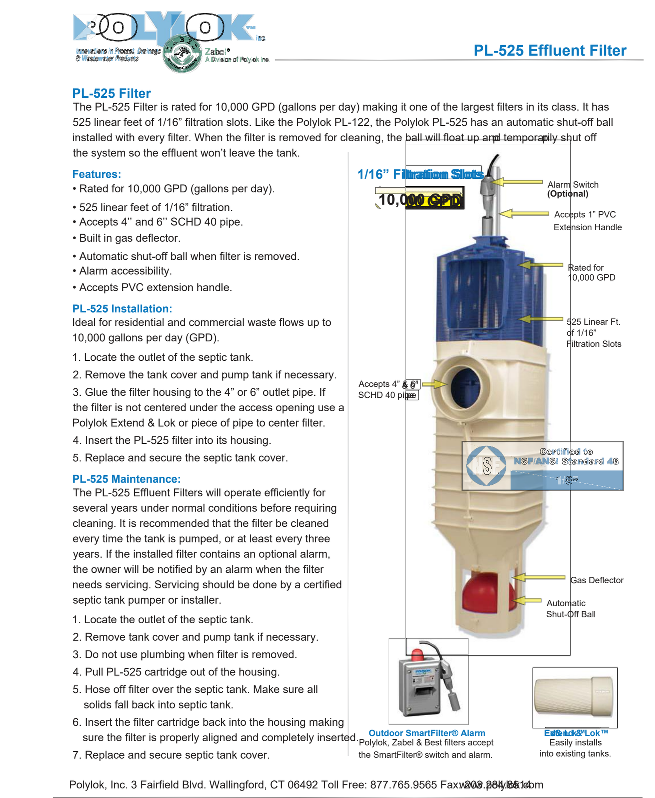

	CHAMBER	Volume (gal)
1	Sedimentation Chamber	1,200
2	Anaerobic Filtration Chamber	1,198
3	Aerobic Contact Filtration Chamber	550
4	Clarification Chamber	268
5	Disinfection Chamber	17
	Total Volume	3,233

SPECIFICATIONS	
Anaerobic Media	PP / PE
Board Type Aerobic Media	PVC / PP / PE
Aerobic Media	PP / PE
Blower	10.6 cfm
Tank	FRP
Piping	PVC / PP / PE
Access Covers	Plastic / Cast Iron
Disinfectant (Optional)	Chlorine Tablets

Note #1
Kitchen Practices

Reduce the amount of FOG entering the sewer system:

- Train all kitchen staff on the best grease disposal practices to follow
- Do not pour, scrape, or otherwise dispose of fats, oils, or grease into sinks or drains; Post "NO GREASE" signs near sinks and drains
- After pumping out grease abatement devices and interceptors, inspect them to be sure they were adequately cleaned
- Store used fryer oil in barrels for recycling
- Dump mop water only into drains connected to your grease treatment system
- Use absorbents to soak up spills containing fats, oils, and grease
- Do not put food (including liquid food) down the drain. That includes milkshake syrups, batter and gravy
- Use strainers on sinks and floor drains to prevent solid material from entering the sewer
- If you have an automatic grease recovery device, empty the collection pan before it becomes full
- Wastewater generated by cleaning duct filters or range filters must be routed through the grease treatment system
- Regularly train all employees on the proper disposal of fats, oils, and grease.

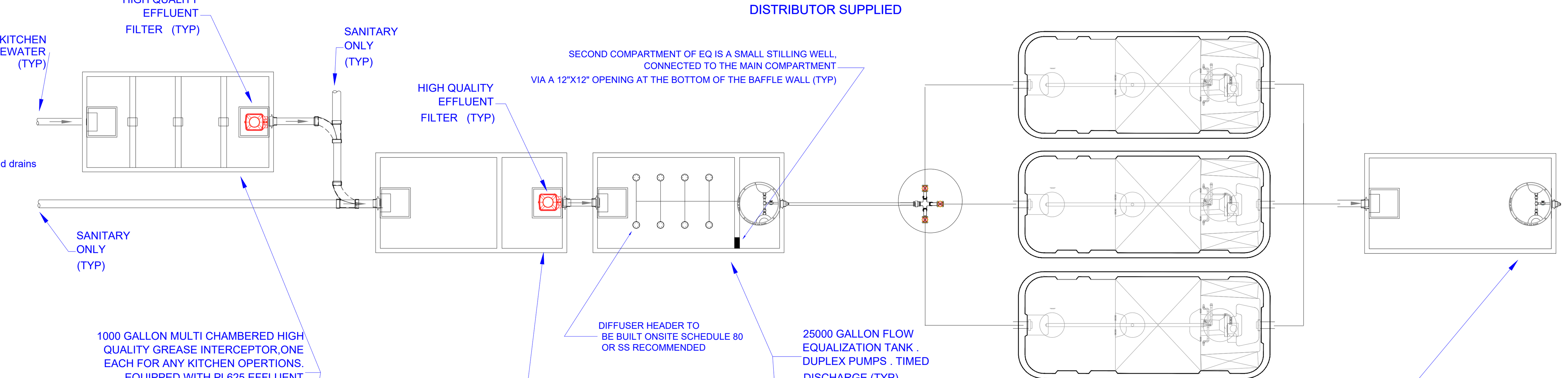

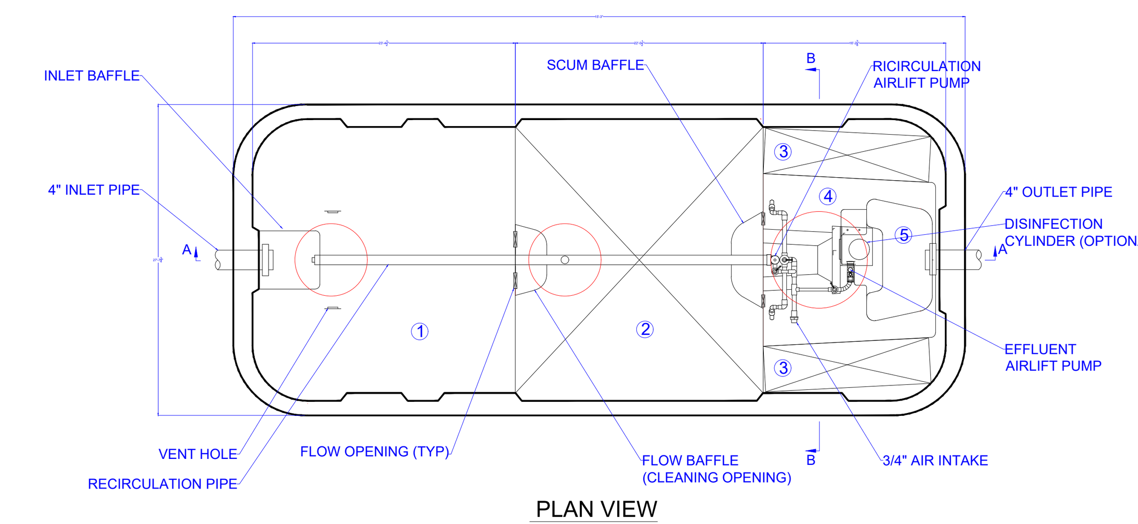

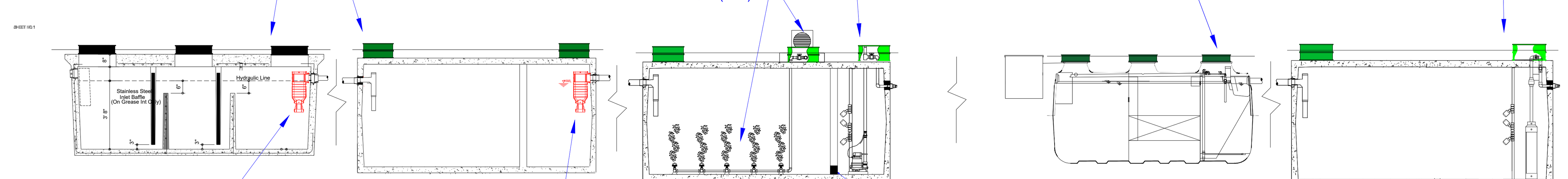

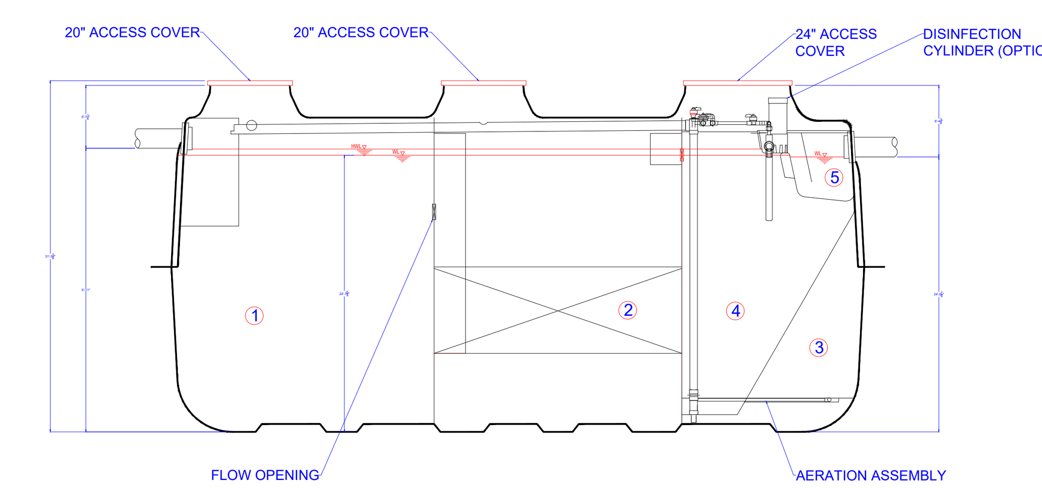

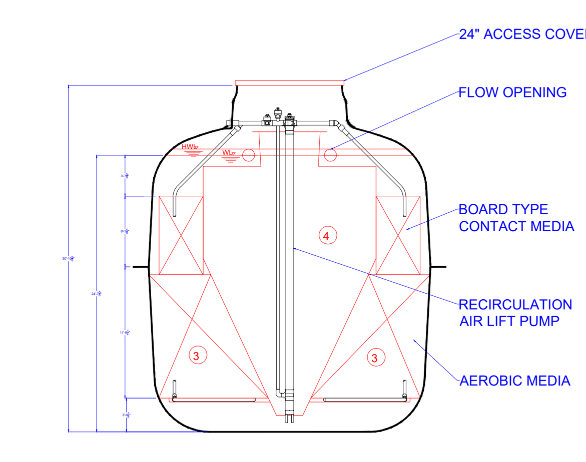

NOTE #2
OPERATION & MAINTENANCE

- IT IS RECOMMEDED THAT A COMPREHENSIVE MAINTENANCE PLAN BE PART OF THE OVERALL DESIGN FOR SUCH APPLICATIONS
- GREASE INTERCEPTOR MUST BE MAINTAINED ON A REGULAR BASIS, AS TO LIMIT THE OUTPUT OF FOG TO NO MORE THAN 20 mg/L.
- ALL UNITS SHOULD BE MAINATAINED ON A REGULAR BASIS TO INUSURE PROPER OPERATION OF THE ENTIRE SYSTEM.
- FUJICLEAN UNITS SOULD BE CHECKED AND MAINTAINED AT REGULAR INTERVALS IN SUCH AN APPLICATION . AT A MINIMUM FUJICLEAN RECOMMENDS NO MORE THAN TWO MONTHS IN BETWEEN VISTS, MORE FREQUENT VISITS MAY BE REQUIED DEPENDENT ON OPERATIONAL PARAMETERS .
- ONLY FUJICLEAN TRAINED AND CERTIFIED OPERATORS SHOULD BE CONTRACTED TO PERFORM MAITENANCE ON ANY FUJICLEAN UNITS.
- FOR A COMPLETE GUIDE TO MAINTENANCE ACTIVITES ON THE FUJICLAN UNITS CONSULT THE O&M MANUALS.
- COMPREHENSIVE O&M SHOULD BE PART OF THE OVERALL PLAN FOR THIS SYSTEM.

Summary Chart

Practice	BOD Impact	Cost Level
Pre-scraping plates	High reduction	Low
Dry wiping greasy equipment	High	Low
Sink strainers	Moderate	Low
Reduce water use in rinsing	Moderate	Low
Enzyme-based drain cleaning	Moderate	Low–Medium
Proper oil disposal	High	Medium
Avoid rinsing high-BOD foods	High	Low
Staff training	High	Low
Grease trap cleaning	High	Medium

DESIGN PARAMETERS		
	INFLUENT	EFFLUENT
DAILY DESIGN FLOW	2000 GPD	2000 GPD
PEAK FLOW	UNKNOWN	UNKNOWN
BOD	900 mg/L	30mg/L
TSS	500 mg/L	30mg/L
TN	120 mg/L	+/-60 mg/L
PHOSPHORUS	UNKNOWN	UNKNOWN
FOG	30 mg/L MAX	30 mg/l MAX
ALKALINITY	150 mg/L MIN	150 mg/L MIN
BIO AUGMENTATION	UNKNOWN	UNKNOWN

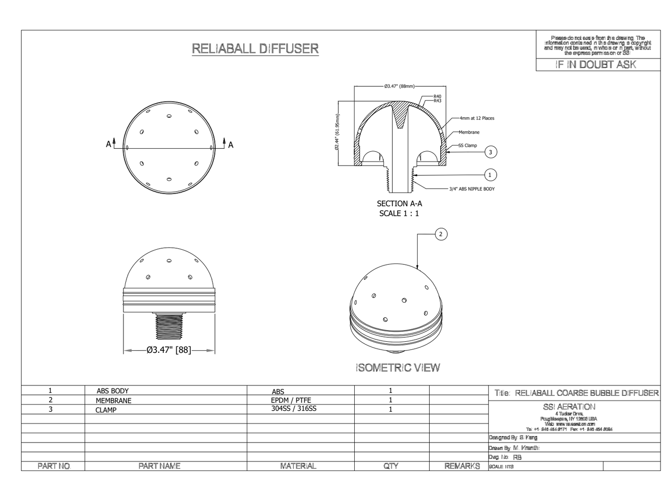

CONCEPT DRAWING IS DESIGN CONFIGURATION SHOWING FUJICLEAN UNIT(S) IN POSSIBLE TREATMENT TRAIN CONFIGURATION AND DOES NOT GUARANTEE PERFORMANCE. FINAL RECOMMENDED PERMITTED DESIGN CONFIGURATION AND COMPONETS ARE THE RESPOSNIBLITY OF THE DESIGN ENGINEER / CONSULTANT . FUJICLEAN RECOMMENDATIONS ARE BASED ON INFORMATION PROVIDED AND FUJICLEAN EXPERIENCE WITH SIMILAR PROJECTS.

Air Line Conduit Diameter Table. (For conduit runs with fewer than 5 elbows)

FujiClean Model/ Air Pump Size — Air Pump to Tank Distance	CE5, CE7 CEN5 / FujiMAC 100RII	CE10, CEN7 / FujiMAC 100RII	CE14, CEN10 / FujiMAC 150RII	CE21, CEN14 / FujiMAC 200RII	CE30, CEN21 / FujiMAC (2)150RII
<33 feet / 10.05 meters	3/4"or 1.09 cm	3/4"or 1.09 cm	3/4"or 1.09 cm	3/4"or 1.09 cm	1"or 2.54 cm
<100 feet / 30.48 meters	1"or 2.54 cm	1"or 2.54 cm	1"or 2.54 cm	1"or 2.54 cm	1"or 2.54 cm

FCUC-26033149 BOWDOINHAM PARK / RESTAURANT	
BOWDOINHAM, MAINE	03.31.2026
CONCEPT #1 REV 0	FUJICLEAN USA / LEE V.
PREPARED FOR NEW ENGLAND SEPTIC SOLUTIONS/ STEWART HANLEY	

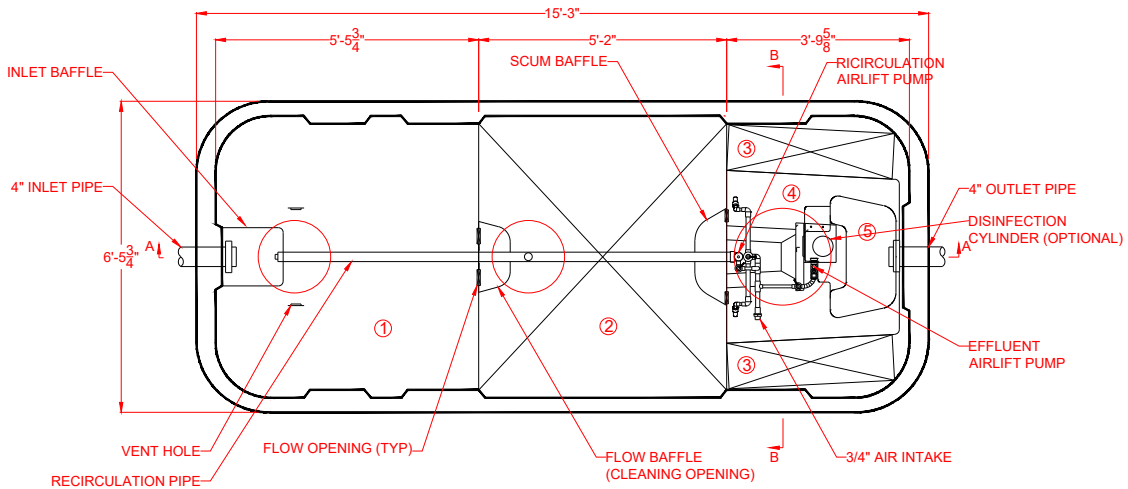

PLAN VIEW

	CHAMBER	Volume (gal)
①	Sedimentation Chamber	1,200
②	Anaerobic Filtration Chamber	1,198
③	Aerobic Contact Filtration Chamber	550
④	Clarification Chamber	268
⑤	Disinfection Chamber	17
	Total Volume	3,233

SPECIFICATIONS	
Anaerobic Media	PP / PE
Board Type Aerobic Media	PVC / PP / PE
Aerobic Media	PP / PE
Blower	10.6 cfm
Tank	FRP
Piping	PVC / PP / PE
Access Covers	Plastic / Cast Iron
Disinfectant (Optional)	Chlorine Tablets

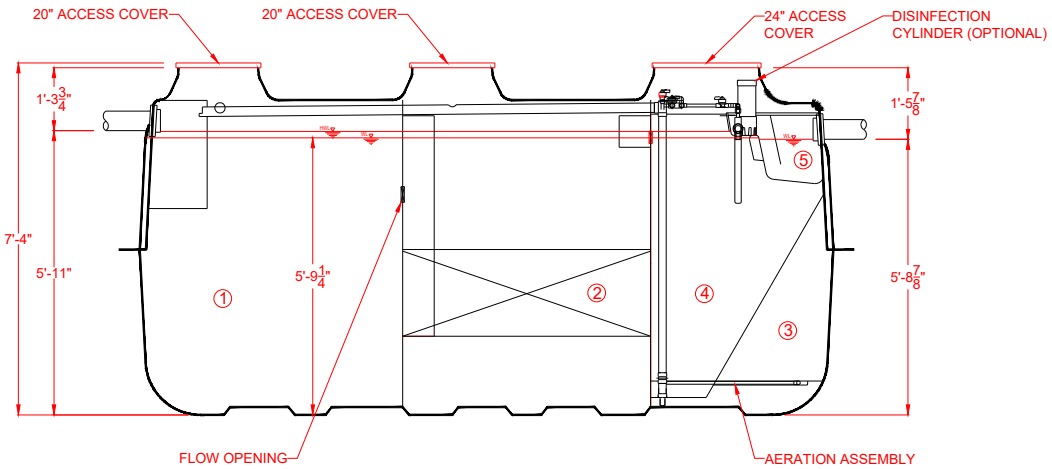

SECTION A-A VIEW

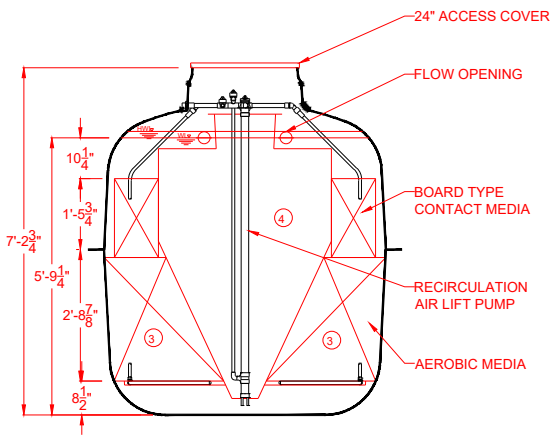

SECTION B-B VIEW

FujiClean USA™
Toward Clean Water…

CE-30
Structural Drawing

DATE:	03/21/2021	SCALE:	1/4" = 1"

DATE

"MAC150RII" Specifications
(120V)

Ver.200806

Specification List

Model		MAC150RII
UL file number		UL E341420
Typical Applications		Aeration, etc.
Rated	Voltage Range and Frequency	AC 120 V±10 V 60 Hz
	Proper Pressure Range	2.9 PSI ±20%
		20 kPa ±20%
	Insulate Class	A
	Rating	Continuous
Exterior	Dimensions	7 1/8″ X 11 7/8″ X 7 3/4″
		180 mm X 300 mm X 198 mm
	Color	White
	Weight	approx. 20 lbs (9 kg)
	Outlet Pipe Size	O.D. 1″ (φ26 mm)
Normal Operation and Performance	Power Cord	6'2″ (1880 mm)
	Input Voltage	AC 120V 60 Hz
	Normal Pressure	2.9 PSI (20 kPa)
	Current	2.0 A or less
	Electricity Consumption	115 W
	Air Flow Volume	5.3 CFM (4.77 CFM more)
		150 L/min (135 L/min or more)
	Noise Level (at 3 1/4 ft)	55 dBA or less
	Temperature Increase (at 77 ℉)	Solenoid :135 ℉ (75 ℃) or less, Surface : 81 ℉ (45 ℃) or less
	Insulation Resistance	1.0 MΩ or more (DC 500 V)
	Withstand Voltage	AC 1500 V – 1 min
Environment	Aging Performance	Initial performance should remain
	Temperature Range	−4 ℉ to 104 ℉ (−20 ℃ to 40 ℃)
	Humidity	90% or less
	Installation Orientation	Install horizontally
	Other	No oil, corrosive gas, nor explosive gas

Performance Curve MAC150RII Ambient 68℉

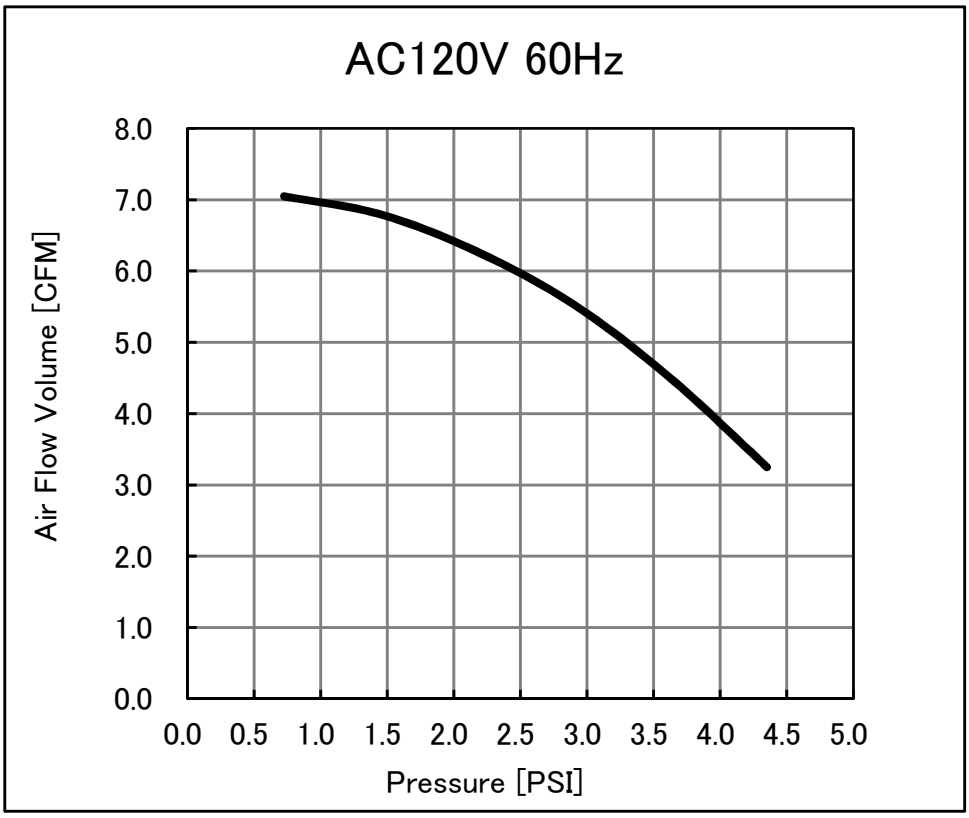

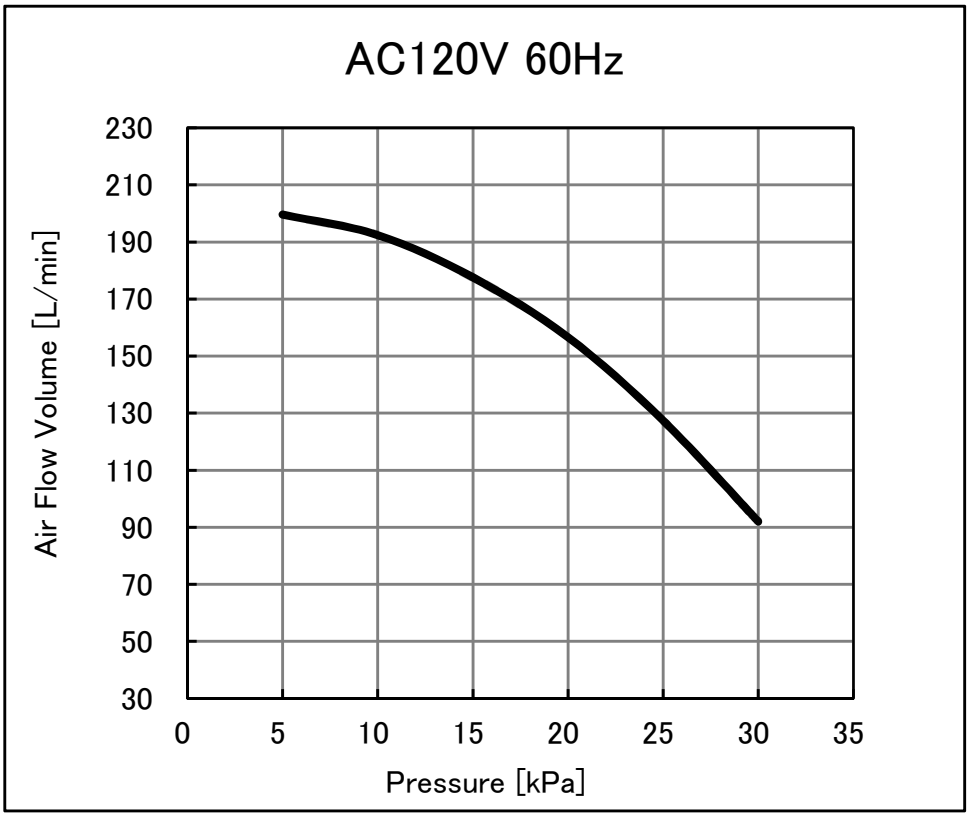

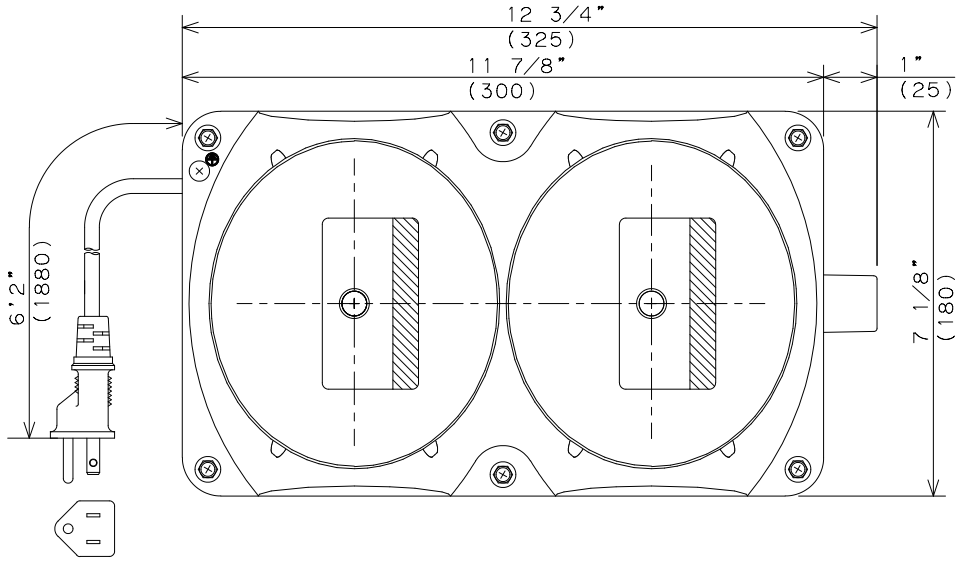

Specifications			
Model		MAC150RII	MAC200RII
Air Flow Volume	CFM	5.3	7.1
	L/min	150	200
Normal Pressure	PSI	2.9	
	kPa	20	
Rated Voltage	V	AC120	
Frequency	Hz	60	
Power Consumption	W	115	155
Weight	lbs.	Approx.20	
	kg	Approx.9	
Outlet Pipe Diameter	inch	1"	
Power Cord Length	inch	6'2"	
UL file number		E341420	
Country of origin		Japan	

Installation / Operation & Maintenance Notes:
- Install blower on leveled solid base. Ensure adequate ventilation and protect against direct sunlight.
- Inspect and clean internal air filter once every 3 months.
- Recommend diaphragm / valve assembly replacement once every 12 months.
  (Note: a torn diaphragm will trigger the Automatic-Stop function.)
- Please make sure to follow the instruction manual.

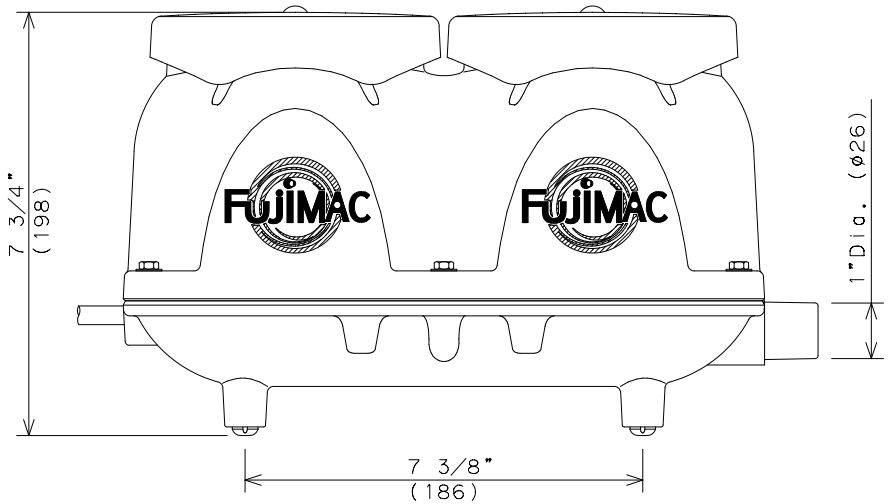

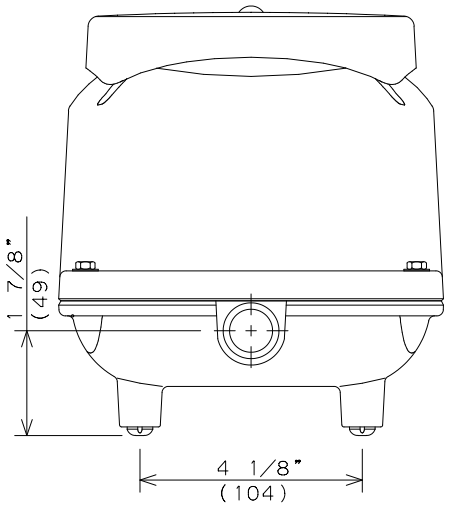

ISSUE DATE
Aug. 12, 2020
FujiMAC

All drawing measurements in inches(mm).

TITLE MAC150RII/200RII		APPROVAL DATE 05-10-2017	
		SIZE A3	SCALE 2:5
FujiMAC		DWG NO T20009Z1-H3	

FK1-0084-11

FujiClean USA™

Toward Clean Water…

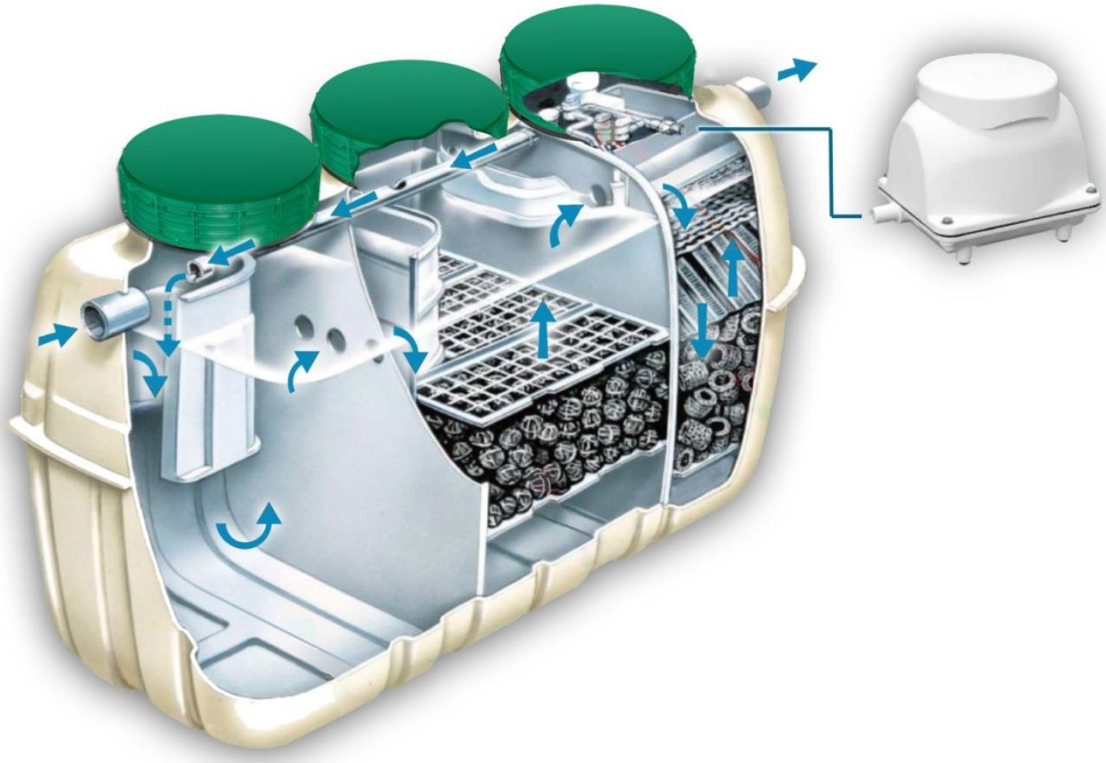

Design Manual

Residential & Light Commercial Applications

CE and CEN Models

Version: 2.1

Revised: March 1, 2024

NSF®

Certified to NSF/ANSI Standards 40 & 245

FujiClean USA ● 41-2 Greenwood Road ● Brunswick Maine 04011 ● Tel: 207-406-2927 ● www.fujicleanusa.com

TABLE OF CONTENTS

This FujiClean Residential System Design Manual is directed to the professional system designer. It includes direction and guidance on:

Introduction …….. Page 1

- *Table 1: Design Specification Table* …….. Page 2

Treatment Process Overview ……... Page 3

Design Principles ……. Page 4

- Wastewater Characteristics …… Page 4
- Implications of Federal, State, and Local Regulations …….. Page 5
- Special Considerations for Nitrogen Removal …….. Page 6
- Design Assistance …….. Page 7

Additional Design Considerations

- Primary Treatment…….. Page 8
- Flow Equalization …….. Page 9
- Grease Traps …….. Page 10

Installation Considerations

- Uplift Restraint ……... Page 11
- Cold Climate Installation …… Page 13
- Installation Beneath Paved Surfaces and Roadways …….. Page 13
- Air Line Sizing, Blower Location, Control Panel Location ……... Page 17
- Venting ……... Page 18
- Final Landscaping …….. Page 19

Operational Considerations

- Start Up ……..…. Page 20
- Seasonal Use ……... Page 20
- System Limitations ……. Page 20

Appendix 1 – System Design Worksheet ……. Page 22

Appendix 2 – Definitions …… Page 23

Introduction

This manual has been developed to assist professionals – engineers, site evaluators, designers, installers, maintenance providers, and regulators – as to the options they have related to the use of FujiClean CE- and CEN-Series models for residential applications. Each use is unique, so this manual cannot exhaust every possibility. Rather, this manual provides information and examples related to different occupancies. The goal is to provide tools so that suitable and effective solutions can be developed for each specific project.

Onsite wastewater treatment refers to the process of treating and disposing, dispersing, or recycling wastewater at or near its point of generation. The phrase has been synonymous with "septic system" because that was at one time the only design alternative available. The phrase was expanded to include "aerobic units," products designed to produce secondary quality effluent. Aerobic units have been useful but are now supplanted by advanced treatment units, such as the FujiClean CE-and CEN-Series models that provide superior BOD and TSS removal while also significantly reducing nutrients such as nitrogen and phosphorus.

The suitability and design of septic systems rely upon native soils to treat *and* disperse wastewater. In fact, treatment and dispersal are essentially combined in the same process. For this reason, septic system use is limited to those soils where both functions can be accomplished. FujiClean units allow owners to separate treatment and dispersal and address each separately. If soil is the selected dispersal alternative, the design can be based solely upon the ability of the soil to transmit water from the site. Owners may have options, depending on local codes, to disperse wastewater into reduced size subsurface designs, or use the treated wastewater for beneficial purposes such as recycling into plumbing systems or irrigating gardens and turf. Further, FujiClean treatment quality can be relied upon to meet local and/or state effluent quality requirements.

The FujiClean CE- and CEN-series models can treat typical domestic wastewater daily flows equal to rated capacities shown in Table 1. FujiClean designs are based on the same principles as many municipal wastewater treatment plants. These design principles have been adapted for the small flows developed by individual residences or small residential developments.

This manual serves as a guide to design an onsite wastewater treatment system using FujiClean units. The manual includes recommendations for applications. The recommendations include typical flow data and component suggestions. Failure to consider and incorporate these recommendations may result in poor unit operation or additional maintenance.

Table 1 – Design Specification Table

Design Specifications	CE Series BOD, TSS						CEN Series BOD, TSS, Enhanced TN				
Model	**CE5**	**CE7**	**CE10**	**CE14**	**CE21**	**CE30**	**CEN5**	**CEN7**	**CEN10**	**CEN14**	**CEN21**
Effluent	NSF40 NSF Test Effluent (Avg.) CBOD:11mg/L, TSS:12mg/L						NSF40/245 NSF Test Effluent (Avg.) CBOD:5mg/L, TSS:6mg/L, TN:10mg/L				
Hydraulic Load (GPD)	500	700	1,000	1,350	1,900	2,700	500	700	1,000	1,350	1,900
Blower Detail:											
Blower Model	80RII	80RII	100RII	150RII	200RII	150RII (x2)	80RII	100RII	150RII	200RII	150RII (x2)
Normal Pressure (kPa)	15	15	18	20	20	20	15	18	20	20	20
Flow Rate (CFM; L/Min)	2.8 CFM 80 L/MIN	2.8 CFM 80 L/MIN	3.5 CFM 100 L/MIN	5.3 CFM 150 L/MIN	7.0 CFM 200 L/MIN	10.6 CFM 300 L/MIN	2.8 CFM 80 L/MIN	3.5 CFM 100 L/MIN	5.3 CFM 150 L/MIN	7.0 CFM 200 L/MIN	10.6 CFM 300 L/MIN
Power Use (kWh/day)	1.2	1.2	1.7	2.7	3.7	5.4	1.2	1.7	2.7	3.7	5.4
Weight (lbs.)	11	11	11	20	20	20 x 2	11	11	20	20	20 x 2
Tank Detail:											
Material	Fiber-Reinforced Plastic						Fiber-Reinforced Plastic				
Height (inches)	62	66	74	78	82	88	66	74	78	82	88
Length (inches)	85	96	99	119	153	184	96	99	119	153	184
Width (inches)	44	50	57	69	73	79	49	57	69	73	79
Weight (lbs.)	397	463	705	926	1,168	1,543	463	705	926	1,168	1,543
Inlet Invert (inches)	49	53	61	62	65	71	53	61	62	65	71
Outlet Invert (inches)	47	51	59	59.5	63	69	51	59	59.5	63	69
Access Ports (number)	3	3	3	3	3	3	3	3	3	3	3
Access Port Diameter (inches)	3 @ 20”	2 @ 20” 1 @ 24”	2 @ 20” 1 @ 24”	2 @ 20" 1 @ 24"	2 @ 20" 1 @ 24"	2 @ 20" 1 @ 24"	2 @ 20” 1 @ 24”	2 @ 20” 1 @ 24”	2 @ 20” 1 @ 24”	2 @ 20” 1 @ 24”	2 @ 20" 1 @ 24"
Volume Total (gal.)	545	749	1,069	1,498	2,252	3,199	749	1,069	1,498	2,252	3,199

Treatment Process Overview

FujiClean's "contact filtration" treatment is a simple, well-engineered process that consists of a controlled, circuitous flow train through anaerobic and aerobic chambers and in direct contact with assorted proprietary fixed film medias on which biological digestion of organic matter occurs. Media is also designed and positioned to provide mechanical filtration of process wastewater.

The system includes two air lift pumps (see diagram below). The Recirculating Airlift Pump returns process water and sludge from the aerobic zone to the sedimentation chamber, recirculating 2-4 times inflow per day for CE models and 4-6 times inflow for CEN (enhanced denitrification) models. The Effluent Airlift Pump is designed to help equalize flow and discharge treated effluent.

Figure 1 – Typical FujiClean CE- and CEN-series treatment system.

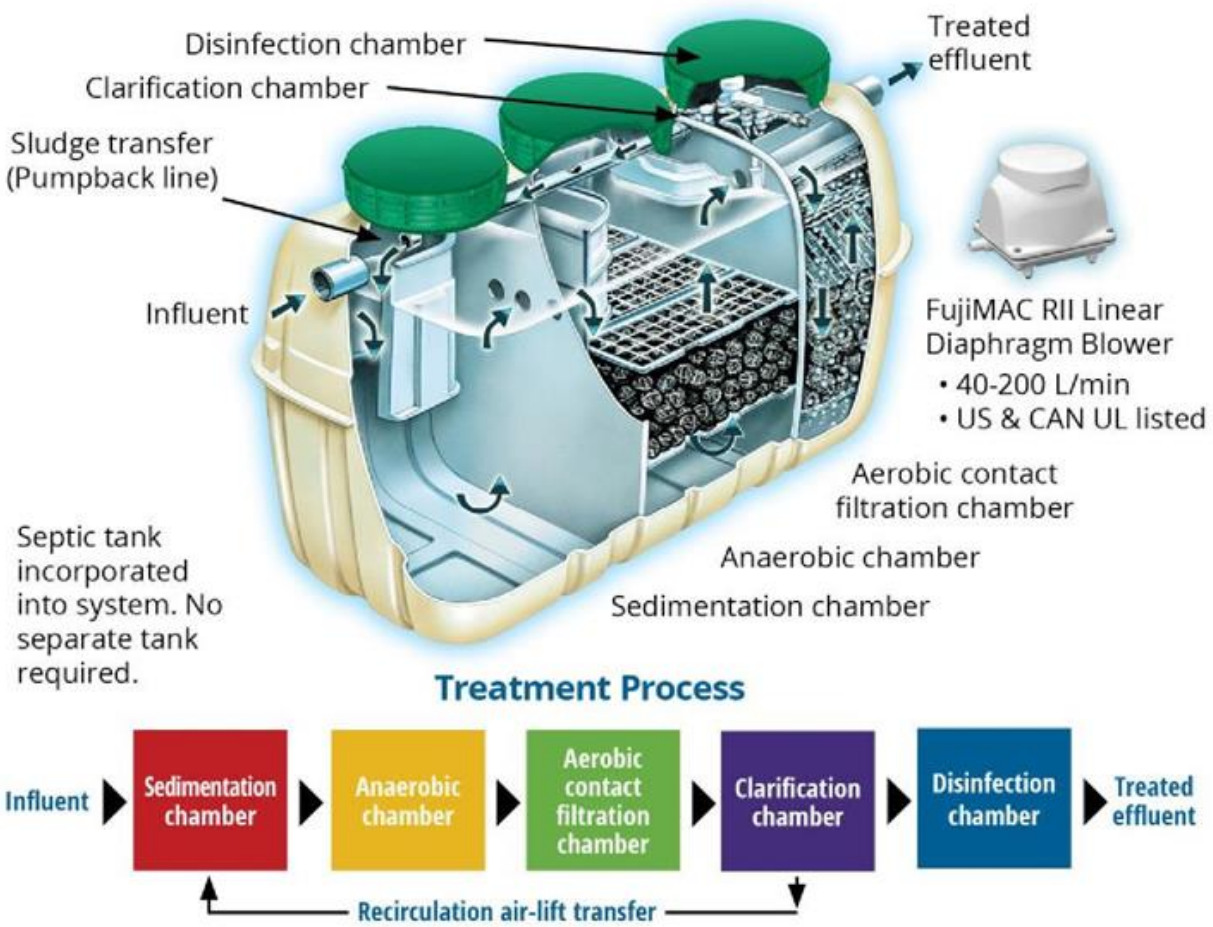

Design Principles

The goal of wastewater treatment is to return to the environment water that does not threaten public health, public safety, or the environment. The role of the FujiClean unit in this process is to remove organic materials, solids, nutrients, and pathogens through biological and physical treatment processes.

Each FujiClean model has a specific rating for hydraulic flow and wastewater characteristics. Generally, wastewater cannot contain any constituent in a concentration detrimental to the health of the biology in the treatment compartments. Moreover, the average concentrations of specific substances typical to all wastewaters cannot exceed specific maximum concentrations, as shown below.

Figure 2 – Typical Residential Installation

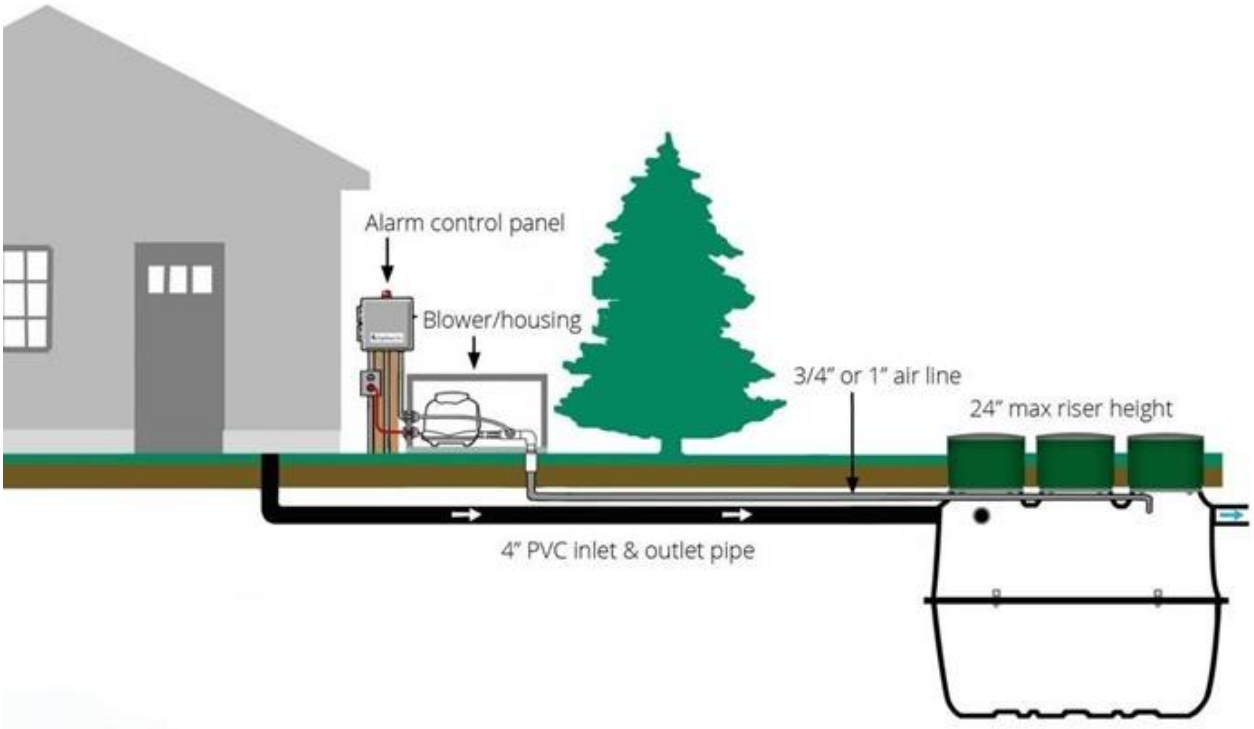

FujiClean's maximum recommended burial depth is 24-inches to allow for limits on tank loading and ease of maintenance. Some jurisdictions, such as Florida, only allow for maximum burial of 18-inches. Please check your local code and ordinances when designing a system.

Wastewater Characteristics

The FujiClean CE & CEN-Series are designed to treat typical domestic wastewater as specified in Table 2. FujiClean units will continue to perform if the wastewater falls outside the limits listed in Table 2, but performance will be degraded, especially if the flow is at design capacity.

Table 2—Typical Domestic Wastewater Design Values	
Constituent	**Typical Value (mg/L)**
BOD_5	100 - 300
TSS	100 - 350
FOG	30
TKN	35-70
TP	12

Each model in the series has a specific design flow. Table 3 flow identifies the maximum volume of typical domestic wastewater that the system can treat in a 24-hour period and is based on NSF/ANSI Standards 40 and 245 certification testing. We have also identified the maximum population based on a flow of approximately 60 gpd/person. For larger and unusual wastewater, designers must exercise judgment to select the appropriate model. Required design flows from residential systems vary widely from state to state and among different residential occupancies. It has been FujiClean's experience in the U.S. that per capita design flow varies between 50 gpd-to-60 gpd, so a lower per capita design flow may be appropriate for larger facilities and occupancies using less water.

Table 3—FujiClean Model Design Flow		
Model	**Design Flow (GPD)**	**Population Served**
CE5 CEN5	500	8
CE7 CEN7	700	12
CE10 CEN10	1,000	16
CE14 CEN14	1,350	22
CE21 CEN21	1,900	32

Designers must consider relevant factors related to flow, organic loading and TN. Additional information to refine decisions includes, but is not limited to, chemical analyses, flow data, wastewater practices, population counts, at-home commercial activities, chronic illnesses, and the like. Typical residential applications generally do not require additional components though exceptions occur.

Implications of Federal, State, and Local Regulations

A successful design must function in terms of technical features but also comply with applicable regulations. These regulations will vary with the location, capacity, occupancy, and final discharge point of the treated wastewater. Regulations include the applicable statutes, administrative codes, policy documents, training materials, approval lists, and past practices and traditions. The various sources may exhibit inconsistencies and even conflict with recommendations provided in

engineering texts, US EPA manuals, or practices in other jurisdictions. Ongoing contact with local regulators is the best way a designer can know that he or she will provide a code-compliant design.

Currently, forty-eight states regulate onsite wastewater treatment systems at the state level. Michigan and California operate at a regional or county level. Even states operating at the state level may allow localities to be more restrictive. Typically, regulations are administered by a public health or safety department. This is not true everywhere. Further, many states split their authority between the public health or safety department and an environmental agency. Jurisdictional splits, where they occur, are generally based on flow in excess of a specific value, occupancy, and/or effluent disposal. Keep in mind that local jurisdictions may be able to add restrictions, so the designer must also contact local code officials to determine what additional requirements, restrictions, and/or prohibitions may exist. It is essential that the designer have a working knowledge of the applicable state and/or local regulations before he or she undertakes a design.

Many counties in many states regulate the design, installation, operation, and maintenance of onsite wastewater treatment systems. Some counties have few regulations while others maintain comprehensive programs that include licensing, certifications, plan review, and mandatory maintenance. Generally, these regulations mandate residential system sizing, usually based on the number of bedrooms. Commercial occupancies generally use building code parameters to establish design flow. These parameters are based on number of patrons, square footage of retail space, restaurant seats, and other indicators of potential wastewater generation. Some codes may consider alternative values to establish flow, such as actual water use for similar facilities, but most codes are prescriptive in setting design flows performance requirements, and treatment capabilities.

Special Considerations for Nitrogen Removal

Jurisdictions are increasingly establishing numerical limits for effluent Total Nitrogen concentrations. These limits can be a challenge for residential occupancy because its wastewater may have characteristics that inherently limit nitrogen removal. The FujiClean CEN-Series of wastewater treatment devices are highly effective in removing organic matter ("BOD") and nitrogen from wastewater. Total Nitrogen ("TN") removals to 13 mg/L are documented in studies from Florida; Maryland; Suffolk County, New York; and Virginia. The reason for this success is the process engineering incorporated into the models. FujiClean units are optimized to process wastewater meeting typical wastewater characteristics including the items listed in Table 4.

Table 4—FujiClean CEN-Series Influent Design Values

Constituent	Value	Constituent	Value
BOD	200 mg/L	TSS	150 mg/L
Total Nitrogen	50 mg/L	Total Phosphorus	12 mg/L
Alkalinity (as $CaCO_3$)	150 mg/L	Temperature	> 50° F
pH	6.0-9.0		

Different jurisdictions have different regulations regarding effluent TN concentrations. Some have no requirements. The minimum requirement for jurisdictions having effluent TN limits is 50%,

generally based on an influent TN concentration of 60 mg/L. The requirement effectively set an effluent TN limit of either 30 mg/L or half the influent value for specific use, whichever is greater. Some jurisdictions, including Florida; Suffolk County, New York; and Rhode Island; have specific numerical effluent quality limits of 19 mg/L or less. Periodic performance monitoring is required to confirm the operation of these units.

Residential wastewater can be challenging in regard to nitrogen removal if the ratio of carbon to nitrogen is atypical. A low BOD or high nitrogen concentration can be the reason. This variance from the norm is not an issue for municipal wastewater treatment systems because all influent is mixed. Onsite wastewater treatment is different because only the wastewater generated onsite is treated; the treatment system must account for the variance in its design.

Design Assistance

FujiClean USA offers design help on any system. Most residential applications are straightforward and can be sized off the design flow in Tables 1 or 3. However, many commercial applications may need additional design considerations based on usage and waste strength. For these applications or flow rates higher than the design flow table, please consult the local FujiClean distributor or FujiClean USA design help personnel. A form is in Appendix 1 – System Design Worksheet, or on our website at FujiCleanUSA.com, to facilitate project review.

Additional Design Considerations

Primary Treatment

Additional primary treatment, which is not recommended for typical residential designs, may be appropriate for specific known issues. These issues can include but are not limited to:

- High Water Use
- Chronic Illness
- Unusual Wastewater
- Home Food Canning
- Ejector Pump
- Excessive Solids
- Large Family
- Unusual Water Flow
- Excessive Kitchen Use

FujiClean conservatively assumes for design purposes that additional primary treatment can reduce the BOD and TSS approximately 30 percent. Primary treatment will also trap the potential myriad of indigestible items that may enter the wastewater treatment system.

Primary treatment, often called a "trash trap" or "pre-treatment tank," is installed to capture and retain large solids such as tampons, disposable diapers, food particles and so forth. No additional treatment or function is expected. The capacity of a trash tank varies with expected solids load. Typically, a trash tank will have a hydraulic detention between 12 and 24 hours. This detention time will allow sufficient time and volume to capture and retain whatever solids are intended for removal. This detention time is also short enough to prevent the generation of noxious odors or objectionable byproducts.

Despite their use for "gross solids," primary treatment tanks can provide significant BOD and TSS removal. Shown in Figure 3 are estimated removals based on detention time and influent concentrations.

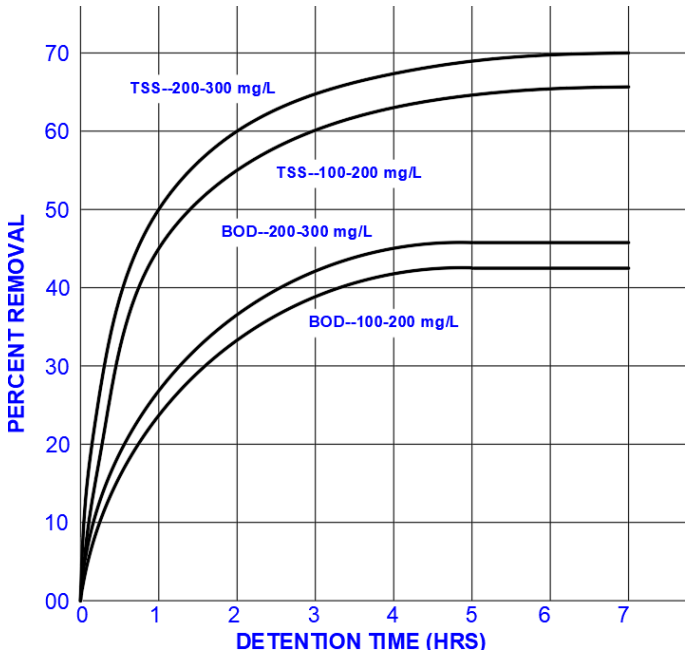

Figure 3—Primary Treatment Tank Removal vs Detention Time (Metcalf and Eddy, 2003)

Flow Equalization

Trash tanks and pre-aeration are used to moderate solids and organics loading. Flow equalization is used to moderate flow. Flow equalization is important because treatment is most efficient when wastewater flow matches treatment capacity. A dwelling with unusual wastewater flow may benefit from having a flow equalization tank. The goal of flow equalization is to moderate the flow such that wastewater flow to the FujiClean unit is as consistent as possible.

Table 5—NSF Flow Regime for Certification Testing	
Time of Day	**Percent of Total Hydraulic Load**
6:00 AM-9:00 AM	35
11:00 AM-2:00 PM	25
5:00 PM-8:00 PM	40

Table 5 shows the flow regime used for NSF/ANSI Standards 40 and 245 certification testing. This regime can be used as a guide to consider whether flow equalization is needed.

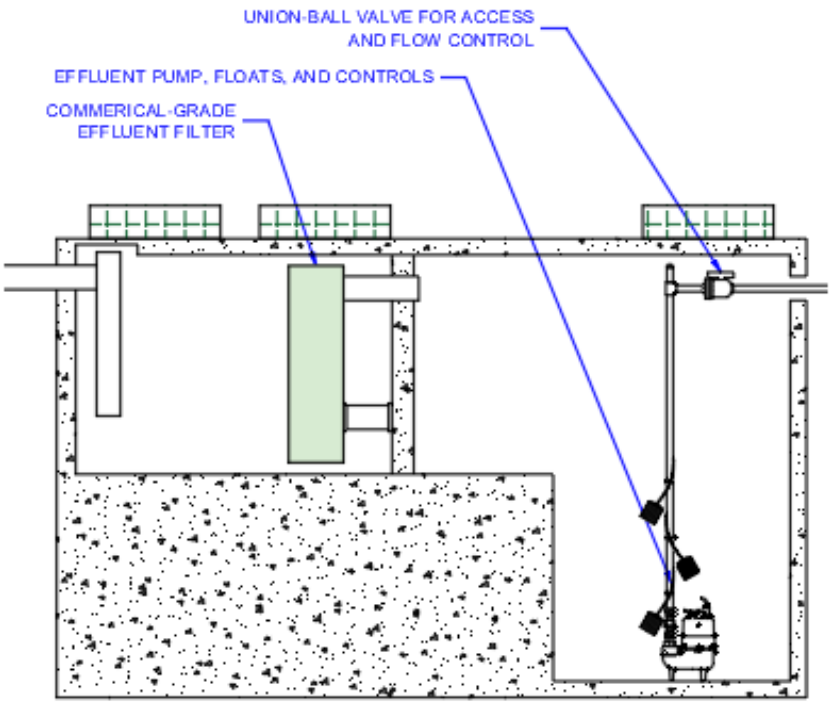

Figure 4—Flow Equalization Tank

Often, the simplest approach to flow equalization is to install a tank large enough to capture and retain the peak flow. The tank is equipped with a pump and related control timer to spread FujiClean dosing over a 24-hour period. "Micro-dosing" works best; where the dose control will activate the pump every 15 minutes - long enough to provide 96 equal doses over a 24-hour period.

Some controls have the capability to alter the cycle frequency if a pre-set water volume is achieved. A separate float activates the alternate dosing frequency. This feature is useful if peak flows

exceed tank capacity but are not sufficiently high to impede treatment efficiency. A typical setting will double dosing events only until the water volume falls below the pre-set level.

General standards for dosing FujiClean systems include:

Table 6—Dosing Parameters		
FujiClean Model	**Max Inflow/Minute**	**Max Inflow/Hour (Gallons)**
CE5 to CE30	16 gal	22% Design Flow
CEN5 to CEN21	5-to-10 gal	22% Design Flow

Maximum inflow volume per hour must be below 22% system design inflow volume (e.g. for CE30, 2700 x 22% = 594 gallons per hour).

Grease Traps

A grease trap is a primary treatment tank intended to capture and retain fats, oil, and grease (FOG) generated during food preparation and clean-up. Grease traps are usually connected to a separate sewer that serves only the food service kitchen and preparation area. A grease trap looks similar to a septic tank but will be sized in accordance with the applicable plumbing or public health code. The grease trap inlet and outlet baffles will also be designed to maximize FOG retention.

Different jurisdictions use different formulas to size grease traps. Some jurisdictions base grease tank sizing strictly on flow. Other jurisdictions use formulas that take into account the number of seats and hours of operation. Be sure to check with local regulators on the correct sizing criteria for the location the grease trap will service.

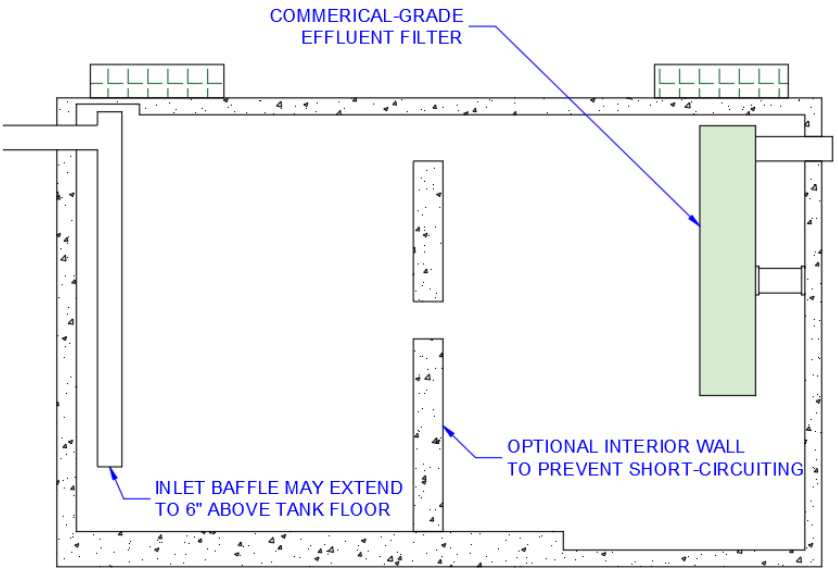

Figure 5—Grease Trap
(Example Tank Only - Consult with FujiClean distributors for local regulation details)

Installation Considerations

Uplift Restraint

Uplift restraint is an occasional requirement because of the many locations that experience high seasonal or tidal groundwater. Alternative uplift restraint procedures and techniques and methods are available, some more appropriate than others depending on site-specific conditions. A common technique used by engineers to calculate uplift restraint requirements is the "Soil Wedge" approach, which relies on the weight and frictional force a "soil wedge" exerts against a concrete block, as illustrated below. Designers are encouraged to consider site-specific conditions when selecting an uplift restraint procedure and technique for any specific installation.

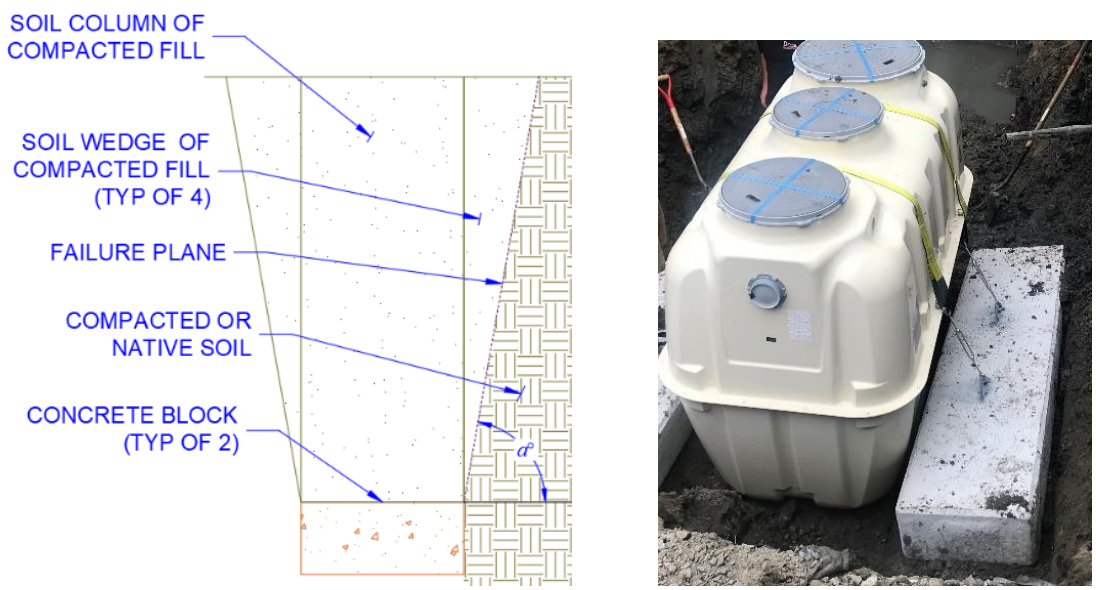

Figure 6 - Soil Wedge Approach for Uplift Restraint

The soil wedge approach considers that soil will exert uplift resistance against concrete blocks. The magnitude of this soil will consist of five components: tank weight, saturated weight of the concrete block, saturated weight of the soil column directly above the block, saturated weight of the soil wedge between the soil column and failure plane, and the frictional force along the failure plane. This approach assumes that there are no moments because opposing lateral forces will cancel themselves; only vertical forces will act on the blocks.

Table 7 below shows concrete deadman sizing calculations using the soil wedge approach for FujiClean CE and CEN models and provides the uplift restraint and factor of safety for a soil having a failure plane of 22.5˚ and a coefficient of friction of 0.4. The soil is cohesive, compacted to at least 95 percent Proctor density, and fully submerged. The saturated density of concrete and soil are 87.6 and 62.6 lb/ft3, respectively. The calculations include a factor of safety.

Keep in mind that uplift restraint is just one of several good practices related to maintaining long-term tank integrity. Service providers should avoid pumping tanks when groundwater conditions

are unfavorable, and they should pump only sufficient liquid to complete the task. Pumped tanks should be refilled as quickly as possible.

TABLE 7—DEADMAN CAPACITY USING SIMPLIFIED SOIL COLUMN APPROACH USING IDENTIFIED FACTORS				
MODEL	**DEADMEN (EA)**	**DEADMAN DIMENSIONS**	**NET RESTRAINT PROVIDED (LBS)**	**FACTOR OF SAFETY**
CE5 / CE7 / CEN5	2	8’ X 18” X 8”	22,200	3.01
CE10 / CEN7	2	8’ X 18” X 8”	26,232	2.60
CE14 / CEN10	2	8’ X 18” X 8”	29,320	2.00
CE21 / CEN14	2	10’ X 18” X 8”	39,065	1.81
CE30 / CEN21	2	12’ X 18” X 8”	51,235	1.75

An alternative approach of anchoring the FujiClean tank to a concrete slab can also be utilized as outlined below in Figure 7.

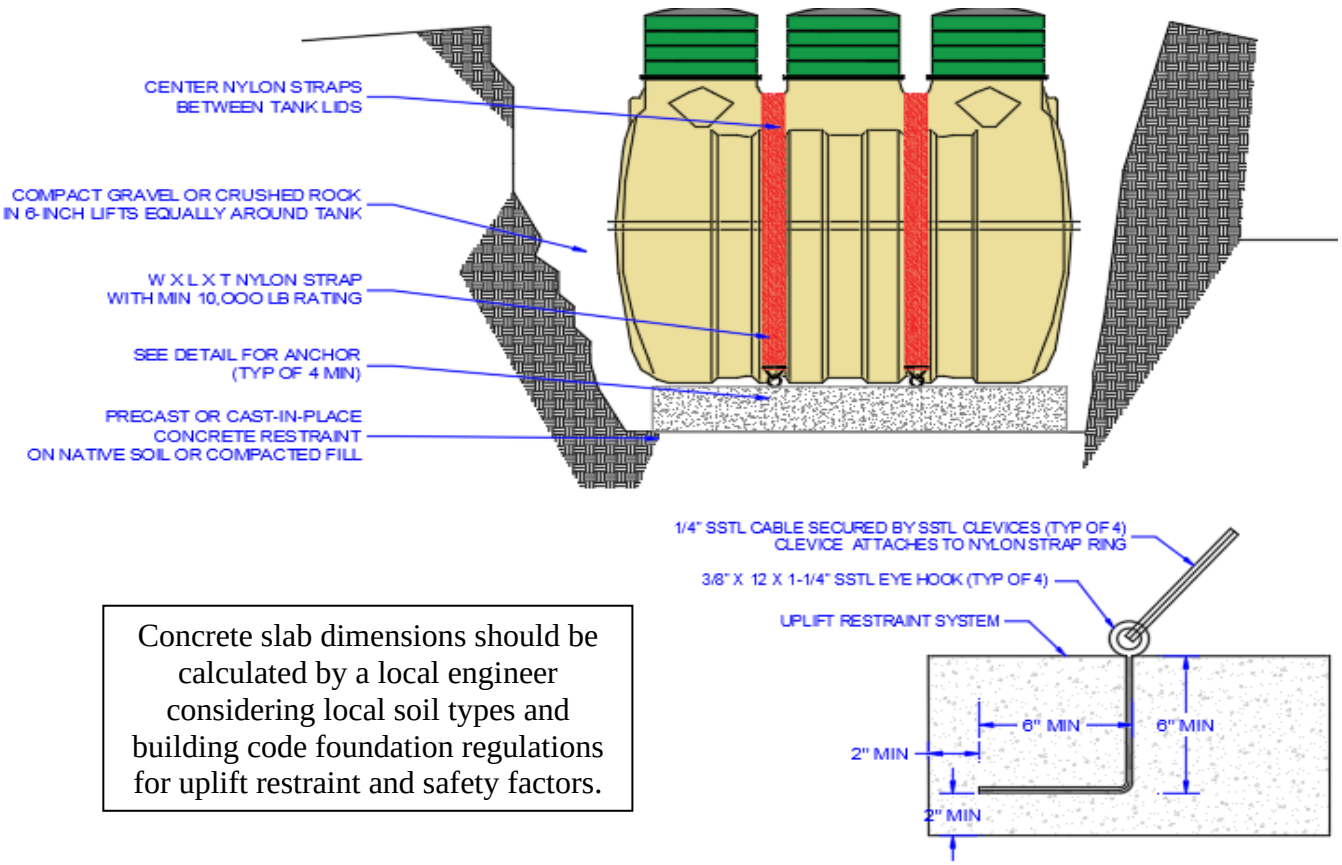

Concrete slab dimensions should be calculated by a local engineer considering local soil types and building code foundation regulations for uplift restraint and safety factors.

Figure 7 – Concrete Slab Approach for Uplift Restraint

Cold Climate Installation

For cold climate installations, please install insulated riser covers and cover upper half of treatment unit with min. R-8 value insulating material (i.e. foam board). See Figure 8 below.

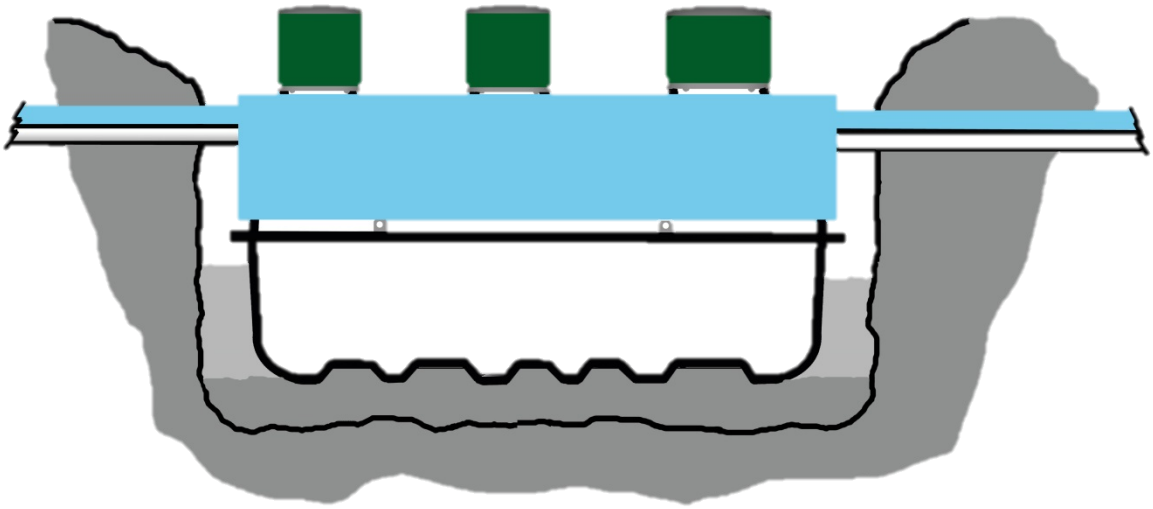

Figure 8 – Cold Climate Tank Insulation

Installation Beneath Paved Surfaces and Roadways

FujiClean units may be buried beneath parking lots, drives, and roadways provided the units are protected against vertical and lateral forces that may damage the tanks. Vertical forces are abated using slabs of sufficient strength and size to resist deflection resulting from vehicle loads. Sample slab designs are provided to guide designers. The samples must be examined by properly credentialed persons on a case-by-case basis before they are used or modified. Each installation is unique, so the designer must have a thorough understanding of the geotechnical conditions and anticipated axle loading to select an appropriate slab design.

Required Preconditions for any traffic rated installation include:

a. Seasonal high groundwater depth must be less than 3’3” (1000mm).
b. Total height from ground level to adapter ring should be 24-inches or less.
c. Bearing power of soil must be 8.7 PSI or greater.

FujiClean recommends three general approaches for placing tanks beneath traffic areas. The first is to position the FujiClean system within a traffic rated precast tank. The second approach is to provide a slab of sufficient strength and on sufficient supporting soils to prevent tank crushing. The third approach is to construct a slab and supporting pillars to support a slab constructed above the tanks.

FujiClean provides only general information in this design manual, additional information can be found in our Installation Manual. Site-specific designs must be executed by properly credentialled persons when tanks are placed beneath traffic areas. Please contact FujiClean USA or its local distributor for details of these options.

1. **Traffic-Rated Tank.** Traffic rated precast tanks with custom cast covers are available in some markets and are typically a cost-effective option. Sand provides an appropriate base and support filler material. Tanks must include drainage.

H-20 rated drainage rings with H-20 rated covers may be used for smaller, models CE-5 to CE-14 and CEN-5 to CEN-10.

2. **Traffic-Rated Slab** (For CE14-CE30 and CEN14-CEN21 only)**.** A traffic-rated slab could be placed directly against supporting soil if the slab is suitably designed and the soils can support the slab and traffic weight without consolidating. Figure 9 illustrates the slab

thickness and supporting soil required to place a slab over a tank. Please note for smaller models (CE5-CE10 and CEN5-CEN10) use method 1. H-20 Traffic Rated Outer Tank or method 3. Column Supported Slab.

Multiple tanks can be placed beneath a slab, but each segment must be sized as if it were a single unit. The effect is that tanks placed side-by-side must each maintain a perimeter as if it were placed alone.

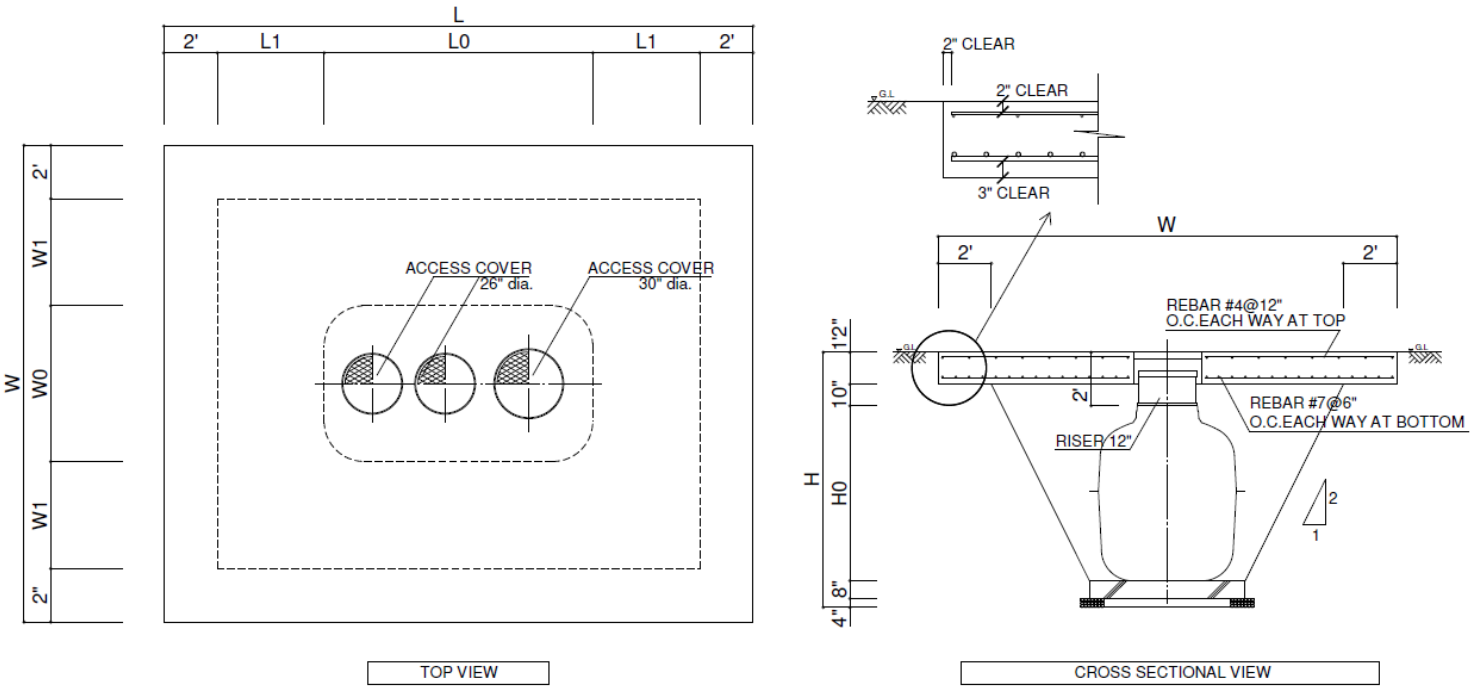

Traffic Rated Slab Dimensions			
Variable	**CE14**	**CE21,CEN14**	**CE30,CEN21**
L	21’1”	24’3”	27’4”
L0	9’11”	12’9”	15’4”
L1, W1	3’7”	3’10”	4’
W	17’	17’6”	18’6”
W0	5’9”	6’	6’6”
H	9’5”	9’9”	10’3”
H0	6’5”	6’9”	7’3”

Material Specifications	
Concrete Strength	F'c= 4500PSI, Min.
Steel Wire	ASTM A615, GRADE 60 New Deformed Bars

Additional Rebar Specifications – All Models		
Top Slab Thickness: 1’2”	Top reinforcing	#4@12-inches O.C.Each way
	Bottom reinforcing	#7@6-inches O.C.Each way
Base	Pre-cast concrete	Thickness: 8”

Figure 9 – Traffic Rated Slab Method

3. **Traffic-Rated Slab Supported by Columns**. FujiClean has routinely used a technique whereby tanks used in traffic areas incorporate slabs supported by a system of columns. The key to this technique is a slab that receives and transmits the traffic loadings. This technique lends itself well to multi-tank installations because the tanks can be grouped closely. Figure 10 below illustrates this technique.

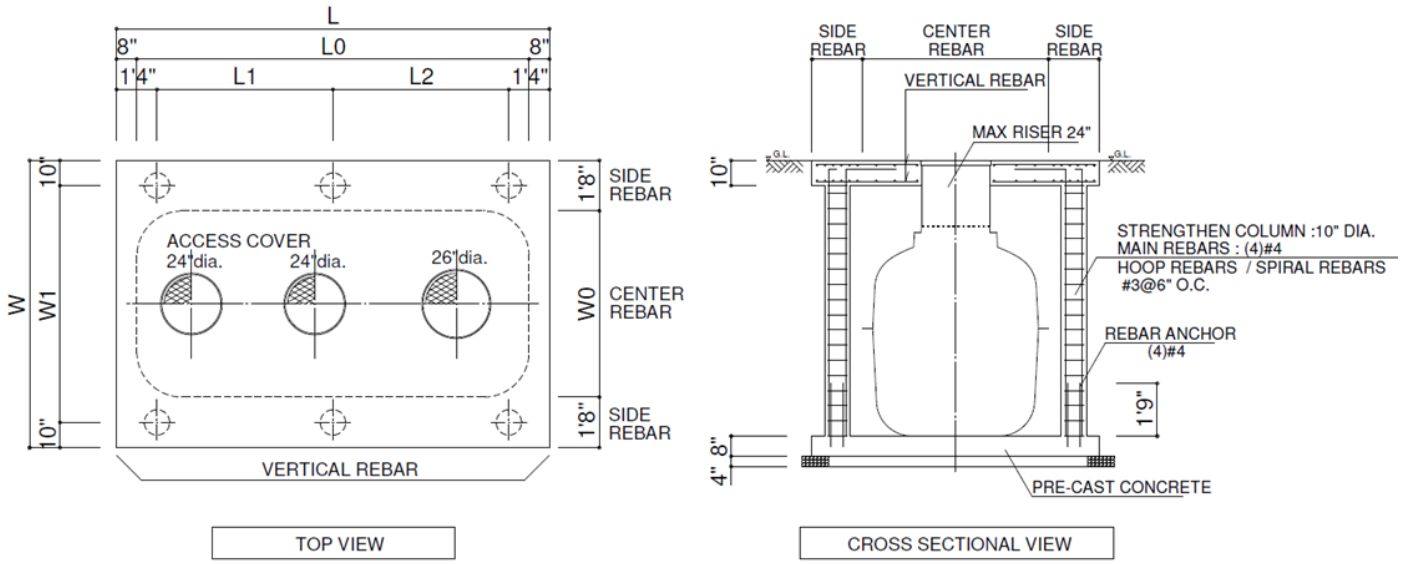

Traffic Rated Slab with Column Support Dimensions			
	CE14	**CE21,CEN14**	**CE30,CEN21**
L	11’3”	14’1”	16’8”
L0	9’11”	12’9”	15’4”
L1	4’3”	5’8”	7’
L2	4’3”	5’8”	7’
W	9’	9’4”	9’10”
W0	5’9”	6’	6’6”
W1	7’5”	7’8”	8’2”

Material Specifications	
Concrete Strength	F'c= 3100PSI, Min.
Steel Wire	ASTM A615, GRADE 60 New Deformed Bars
Foundation	4” min. #57 Stone

Additional Rebar Specifications – All Models			
Slab t: 10”	Side Rebar	(5)#5 E.F.	(6)#5 E.F.
	Vertical Rebar	#5@4" O.C. E.F.	
	Center Rebar	#5@8" O.C. E.F.	
Pillar	Strengthen Column	10" DIA	
	Main Rebar	(4)#4	
	Hoop Rebar / Spiral rebar	#3@6" O.C	
Base	Pre-cast concrete	Thickness: 8”	

Figure 10 – Traffic Rated Slab Supported by Columns Method

Keep in mind that these approaches are provided as general approaches. Design professionals should consider site-specific designs they execute. Additional details for each design are found in the FujiClean Installation Manual.

Air Line Sizing, Blower Location, Control Panel Location

The FujiClean system operates using a high efficiency FujiMAC air blower to transfer clean air to the aerobic contact filtration chamber. A control panel is also supplied to operate not only the air blower but also any other electronic equipment such as high-water alarms, blower fail circuit, and/or dosing pump. Typically, the blower and control panel are mounted near the treatment tank(s). Follow the guidance below for airline sizing, blower and control location. If site conditions won't allow for this, please contact FujiClean USA for additional instructions (which typically involves upsizing the FujiMAC blower to accommodate).

- Locate the FujiMAC blower within 30-feet of treatment system and with no more than five (5) elbows. Care should be taken to size the blower line correctly with minimal obstructions. Refer to Table 8 to size airline conduit.

Table 8 – Air Line Conduit Diameter Table. (For use with conduit runs of fewer than 5 elbows)

FujiClean Model/ Air Pump Size Air Pump to Tank Distance	CE5, CE7 CEN5 / FujiMAC 80RII	CE10, CEN7 / FujiMAC 100RII	CE14, CEN10 / FujiMAC 150RII	CE21, CEN14 / FujiMAC 200RII	CE30, CEN21 / FujiMAC 150RII (2)
<33 feet	3/4"	3/4"	3/4"	3/4"	1"
<100 feet	1"	1"	1"	1"	1"

- FujiMAC blower(s) should be installed on an independent, level, solid (e.g. concrete) base positioned at least 8-inches from building wall so as not to transfer the vibration. Airline conduit is installed in a trench (min. 6" deep) from tank to air pump. Blower location should never be located greater than 100 ft. from treatment tank.
- Install blower and control in a well-ventilated space out of direct sunlight and protected from elements such as direct rain or snowfall. Selected location should drain properly and not pond water. Install in a location that allows unencumbered access for inspection and maintenance activity. Do not install in areas near grease exhaust fans.
- For residential installations (such as home wastewater treatment systems), be aware of quiet blower operational noise and avoid installing near bedroom windows and other locations where operational sounds may be a nuisance.
- FujiMAC blowers are designed for use on a nominal 120V circuit and include a grounding plug. System should be wired by a qualified electrician. All wire connections into control panel must use approved sealant to prevent corrosive septic gas transmission into control panel.

Note: Some states and contractors require a flexible airline adaptor as shown. (adaptors are supplied by FujiClean USA)

Venting

FujiClean systems require venting to remove gases resulting from microbial action or air pumped into the water by the aerator. The excess air and gasses typically vent back through the plumbing system and escape through a roof vent. Some plumbing codes or installations are such that the FujiClean unit cannot vent back through the plumbing. The FujiClean must be directly vented in these cases.

FujiClean systems can be equipped with a vent that attaches either to a carbon filter or connected to a venting system. The connection is made by the installer at a specific location identified on the FujiClean tank. A 3-inch connection, fittings, and piping are attached and directed based on the individual installation requirements. The designer should evaluate if tanks need to be vented and what configuration of piping best achieves efficient venting.

Listed below are generally recommended pipe diameters based on vent pipe length.

Table 9 – Vent Pipe Sizing		
	Vent pipe length <16 feet (5m)	Vent pipe length >16 feet (5m)
Residential	2" φ (50mm)	3" φ (75mm)
Commercial	3" φ (75mm)	4" φ (100mm)
• Local regulations may specify required vent pipe diameter • Keep horizontal vent pipe as short as possible. Vertical pipe length should be 2 times longer than horizontal • Installation of a positive flow ventilation fan facilitates better ventilation • Greater temperature differential between tank and outside air facilitates more effective ventilation		

Final Landscaping

During final landscaping, seeding etc., be sure to pitch final grade away from covers to sweep surface water away from the system.

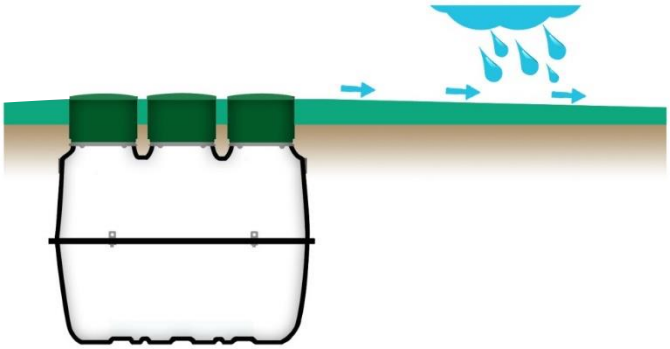

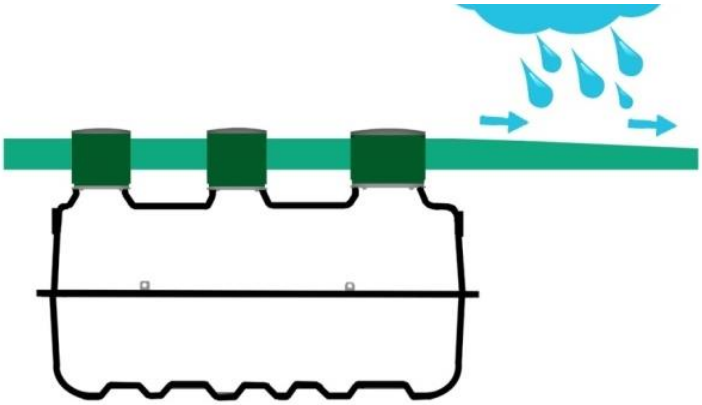

Operational Considerations

Start Up

FujiClean models rely on physical and biochemical processes to complete wastewater treatment. Physical treatment mostly occurs in the sedimentation chamber. Biochemical treatment mostly occurs in the anaerobic chamber and aerobic contact filtration chamber. The biochemical processes rely on ubiquitous, naturally occurring microbes. These processes will occur automatically in virtually all installations. The microbes generally populate the tank over the course of three-to-six weeks.

Occasionally, an installer will "seed" a unit by adding to the tank several gallons of partially treatment wastewater from another functioning system. Seeding essentially reduces the start-up period to one week or so because the seed will contain billions of rapidly reproducing microbes.

Seeding is often used to prevent or abate a common start-up condition known as "foaming." Occasionally, an owner will complain that a new FujiClean unit will exhibit excessive foam exiting the lids. The foam is generally misinterpreted as a sign of excessive soap use. In reality, the foam is a type of microbe known as "filamentous bacteria." These bacteria provide an important function in wastewater treatment but are usually limited by the abundance of other microbes. Filamentous bacteria tend to reproduce more quickly in new installations because other microbes may reproduce more slowly or require a higher concentration of organic material. The result is that bacteria grow wildly and in such a manner that their proliferation appear of bubbles.

The FujiClean Installation and O&M manuals contain additional information regarding start-up and foaming.

Seasonal Use

FujiClean models are appropriate for seasonal use dwellings provides attention is paid to start-up and shut down. The specific procedure will vary based on length of disuse and climate. Generally, a FujiClean unit can be left unattended and will suffer no harm. Some owners may wish to reduce power consumption by placing the aerator on a timer, running the unit for short periods. Others may turn off the power completely. Start-up procedures, including "seeding," can be used to provide optimal use.

System Limitations

Although every effort has been made to design a robust treatment system, user inputs can often determine if a system is operating successfully. Homeowners should be educated regarding the operation of their septic system. This includes following the "Do and Don't List" for Owners in Figure 11. Homeowner manuals and Frequently Asked Question (FAQ) list are available on the FujiClean USA website (Fujicleanusa.com) to further educate the user. Twice per year maintenance is required to keep the system running properly. Each visit usually involves about 30 minutes to flush and check the system.

Figure 11—Typical "Do and Don't List" for Owners

LIMITATIONS ON THE USE OF AN ONSITE WASTEWATER TREATMENT SYSTEM

An onsite wastewater treatment system is limited in its ability to treat wastewater. The following guidelines should be followed:

1. **Inert Materials:** Plastic, rubber, scouring pads, dental floss, cigarette filters, bandages, hair, mop strings, lint, rags, cloth and towels do not degrade in the treatment system. Inert materials will build up solids, and lead to system malfunction, clogging, and or increased pump out frequency.

2. **Paper Products:** Disposable diapers, paper towels, baby wipes, facial tissues, are not designed to dissolve in the treatment system. Excessive amounts of toilet tissue will also not decompose. All can lead to system malfunction, back up, or increased pump out frequency.

3. **Food Wastes:** Food wastes, which include spoiled milk, animal fats and bones, grease, coffee grounds, fruit rinds, corn cobs, eggshells, significantly add to the BOD and solids loading of the system. Garbage disposal use is NOT recommended. If one is installed, it should be limited to waste that cannot be scooped out and thrown in the trash. Excessive food wastes will lead to performance issues, potential odors, and increased pump-out frequency.

4. **Medicinals and Personal Care Products:** Baby wipes, lotions, female sanitary products, cotton balls or swabs, condoms, and expired medicines/antibiotics will significantly add to the solids loading and may impede or destroy system performance. Dispose of the products with other solid wastes. Medicinals should be discarded in conformance with applicable public health guidelines.

5. **Additives:** Additives are typically unnecessary. Avoid their use unless specifically instructed by the maintenance provider, who will also provide a specific product and instructions for its use.

6. **Disinfectants:** Disinfectants and household chemical should be used in accordance with applicable instructions. Toilet bowl disinfection tablets (blue, clear or otherwise) will degrade system performance and should be avoided. Products using "Quat" should be used sparingly.

7. **Chemicals and Toxins:** Chemical and toxic substances will kill the microbes necessary for treatment. Chemicals and toxins include but are not limited to paint, paint thinner, solvents, volatile substances, drain cleaners, automotive fluids, fuels, pesticides, herbicides, fertilizers, metals, excessive amounts of disinfectants, sanitizers, bleach, and mop water. Dispose of chemicals and toxins in accordance with applicable hazardous waste regulations.

8. **Laundry Practices:** Laundry should be washed throughout the week if possible. "Laundry days" should be avoided. Excessive use of detergents, especially those containing bleach, can affect system performance. Liquid detergents are recommended over powders. Fabric softener sheets are recommended over liquid softeners. Bleach should be used sparingly and at half the amount indicated on the container.

9. **Clear Water Wastes:** Discharges from air conditioner condensate lines, floor drains, gutters, whole house water treatment systems sump pumps, and backwash water softener regeneration will degrade system performance. Direct clear water wastes to footer drains and/or effluent dispersal in accordance with applicable regulations.

10. **Excessive Loading:** Onsite treatment systems have specific capacities to process organic matter, solids, and nitrogen. Excessive flow and/or organic loading will impair operation. Biological systems are not designed to treat industrial process wastewater.

11. **Water Tightness:** Onsite systems are designed to treat only wastewater from toilets and sinks. Extraneous water sources, rainwater, water leaks, drainage, or any other source, will quickly degrade performance. Make sure all plumbing is operating properly and is watertight.

Owners should review the Owner's Manual and thoroughly understand the requirements, recommendations,

Appendix 1 – System Design Worksheet

System Design Worksheet

Engineering company / Designer Name: _____

Phone/E-mail : _____ / _____

Distributor: _____

Project Name _____

Phone/E-mail: _____ / _____

Project Address: _____

Expected installation date: _____ Month / Year _____

Project Information: _____ ☐New ☐Existing Design Flow (gpd): _____

How is Design Flow Calculated?: _____
(Which category)

Facility Type: ☐Single Family ☐Residence subdivision ☐Apartment ☐ Hotel (B&B) ☐Resort
☐Restaurant ☐Office ☐Store ☐School ☐Public Restroom
☐Other

Site Description: ☐Seasonal ☐H-20 Requirement ☐High Water Table ☐Other

Additional information: _____

_____

_____

_____

_____

Influent (Existing or Required parameter)

Sampled from Where?

BOD5: _____ COD: _____
TSS: _____ TKN: _____
Ammonia-N: _____ Alkalinity: _____
FOG: _____ pH: _____
Min._____GPD / Max._____GPD
Avg._____GPD / Peak._____GPD
Business Hours (if applicable): _____

Effluent (Required parameter)

BOD5: _____ CBOD5: _____
COD: _____ TSS: _____
Ammonia-N: _____ Nitrate: _____
Total Nitrogen: _____ FOG: _____
Fecal: _____ DO: _____
Turbidity: _____

41 Greenwood Rd. Brunswick, ME 04011 Tel: 207-406-2927 Email: info@fujicleanusa.com

Appendix 2 – Definitions

The following definitions are critical to understanding the design, installation and operation of Fuji Clean units. These definitions have been purposely simplified so they can be understood by a wide range of readers.

$cBOD_5$: Five-Day Carbonaceous Biochemical Oxygen Demand. The concentration of oxygen (expressed as mg/L) utilized by microorganisms in the non-nitrogenous oxidation of organic matter during a five-day period at a temperature of 20°C.

Clarify: A process of separating from wastewater fats, oils, grease, and floatable materials, which float to the surface; and solids, which sink to the bottom.

Clear Water Waste: Wastewater from sources other than plumbing fixtures and appliances that is not regulated as wastewater. Examples include roof drains, floor drains, water softener backwash, high efficiency furnace condensate, air conditioning condensate, refrigerator condensate, and sump pumps.

Commercial Occupancy: A space used for commerce or industry.

Degassing: The process of removing gasses, principally nitrogen, trapped in FujiClean media.

Desludging: The process of removing settled solids from a FujiClean system. "The process of removing scum and solids from a FujiClean system. This process also includes removing accumulated solids from within the system's media."

Dispersal: A process for recycling treated wastewater back into the environment.

Dosing: A process for periodic discharge of wastewater to a FujiClean unit.

Effluent: The discharge from a treatment component or system.

Flow Equalization: A process for mitigating variations in flow by holding wastewater in a tank and dosing the wastewater into the FujiClean unit.

Flow Equalization Tank: A watertight tank, timer, and pumping system having a detention time of 16-to-24 hours used to capture and retain solids, grit, and scum, and then meter the water into the FujiClean unit through periodic dosing.

FOG: Fats, oils, and grease in wastewater. Generally, FOG includes organic materials that can be dissolved in hexane.

Flow Regime: The pattern of water use at a specific site.

Frequenter: The targeted user of an occupancy, including but not limited to students of a school, diners of a restaurant, or customers to a business.

FujiClean CE-Series: A wastewater treatment system series certified under NSF/ANSI Standard 40.

FujiClean CEN-Series: A wastewater treatment system series certified under NSF/ANSI Standard 245.

Grease Trap: A tank for capturing and retaining fats, oil, and grease.

Maintenance: Periodic activities intended to maintain the efficiency and effectiveness of the system.

Mixed Liquor: The contents of the FujiClean aeration chamber consisting of, but not limited to, partially treated wastewater and microbial colonies that oxidize the organic material in the wastewater.

NSF/ANSI Standard 40: A performance certification standard intended for onsite wastewater treatment systems having a flow of between 400 and 1500 gpd (gallons per day) and a single point of discharge and producing an effluent meeting Secondary Effluent Treatment Standards.

NSF/ANSI Standard 245: A performance certification standard intended for onsite wastewater treatment systems having a flow of between 400 and 1500 gpd (gallons per day) and a single point of discharge and producing an effluent meeting Secondary Effluent Treatment Standards and providing a 50 percent TN (Total Nitrogen) reduction from the influent value.

Occupancy: The primary use or uses of a building or space within a building. Occupancies are usually classified by local building and fire codes under categories such as office, residential, food service, factory, school, and so forth.

Onsite Wastewater Treatment System: A device or combination of devices, which may include tanks, vessels, pumps, aerators, and other mechanical equipment, intended to treat and disperse wastewater at or near the point of generation.

Pretreatment Tank: A watertight tank, having a detention time of at least 24 hours, used to capture and retain solids, grit, and scum before the wastewater enters the FujiClean unit.

Residential Occupancy: A building used to house individuals and families.

Secondary Effluent Treatment Standards: Wastewater treatment system effluent having a cBOD5 less than or equal to 25 mg/L and a TSS less than or equal to 30 mg/L. (NSF/ANSI Standard 40)

Septic System: An onsite wastewater treatment system comprised of a septic tank and soil absorption system.

Septic Tank: A watertight tank having a detention time of 24-to-48 hours, or more, used to clarify wastewater and capture fats, oil, greases, and inert solids.

Soil Absorption System: A system consisting of trenches and pipes—or equivalent "gravel less" devices—used to disperse water into the soil where additional treatment may occur, and the water is dispersed from the site.

Tertiary Effluent Treatment Standards: Wastewater treatment system effluent having a cBOD5 less than or equal to 10 mg/L and a TSS less than or equal to 10 mg/L. (Tertiary Effluent Treatment Standards often include TN and/or TP removal standards.)

Trash Trap: A watertight tank for capturing and retaining solids.

Seeding: A process for facilitating bacterial growth by providing mixed liquor from another FujiClean unit.

TKN: Total Kjeldhahl Nitrogen. The quantity of organic nitrogen and ammonia (expressed in mg/L) found in wastewater.

TN: Total Nitrogen. The total quantity of nitrogen (expressed in mg/L-N) that exists in the wastewater. Nitrogen may be in the form of either "TKN, nitrate and nitrate" or "organic nitrogen, ammonia, nitrate and nitrite."

TP: Total Phosphorus. The total quantity of phosphorus (expressed in mg/L-P) that exists in the wastewater.

TSS: Total Suspended Solids. The quantity of solids (expressed in mg/L) that can be readily removed from a well-mixed sample with standard laboratory filtering procedures.

Typical Domestic Wastewater: Wastewater having the characteristics as shown below.

Table 2—Typical Domestic Wastewater Design Values

Constituent	Typical Value (mg/L)
BOD_5	100 - 300
TSS	100 - 350
FOG	30
TKN	35-70
TP	12

Wastewater: Water generated because of human activities and containing feces, urine, blood, food byproducts, rinse water, laundry water, process water, and the like.